Series
VENTS
VUT 300 EV mini EC



A6 control panel

Series
VENTS
VUT 301 EV mini EC



A6 control panel

Air handling unit in heat- and sound-insulated casing with electric heater.
Air capacity up to **270 m³/h**, heat recovery efficiency up to 95 %.

Description
The air handling units VUT 300/301 EV mini EC are the fully-featured ventilation units with heat recovery for air filtration, fresh air supply and stale air extract.
The heat contained in the extract air is recuperated in the high-efficient plate counter-flow heat exchanger to warm up supply air.
The units are designed for energy efficient ventilation of cottages and flats and are compatible with round Ø 125 mm air ducts.

Modifications
VUT 300 EV mini EC – unit with an integrated control panel.
VUT 301 EV mini EC – unit with an external control panel.

Casing
Made of high-quality polymer coated steel, internally filled with 15 mm cellular polypropylene heat- and sound-insulating layer.

Filter
Supply and extract air flows are purified through two bag filters with filtering class G4. A replaceable filter with filtering class F7 is optionally available.

Fans
High-efficient electronically-commutated motors with external motor and impeller with backward curved blades.
Such motors are the most state-of-the-art energy-saving solution. EC motors are featured with high performance and total speed controllable range.
High efficiency reaching 90% is the premium advantage of the electronically-commutated motors.

Heat exchanger
Counter-flow polystyrene heat exchangers with high heat recovery efficiency. The drain pan under the heat exchanger block ensures condensate removal.
In case of freezing danger determined by the temperature sensor the supply fan is turned off for the period required for the heat exchanger defrosting. The heat exchanger is easily removed for cleaning.

Heater
The unit is equipped with an electric heater located downstream of the heat exchanger to warm up supply air um to set comfortable temperature up to +30 °C.
The heating electric elements have active overheating protection controlled by the temperature sensor in the air duct and two overheating thermostats. The first one is actuated at +60 °C and has automatic reset and the second one is actuated at +90 °C and has manual reset. Air supply to the electric heating elements at the end of the heating cycle ensures cooling of the electric heating elements.

Control and automation
The unit has integrated automation with the control from the multifunctional built-in control panel for the VUT 300 EV mini EC model or the external control

Designation key:

Series	Rated air capacity [m³/h]	Heater type	Duct connection	Type	Motor type
VENTS VUT	**300** – unit with a built-in control panel; **301** – unit with an external control panel.	**E** – electric	**V** – vertical	**mini**	**EC** – synchronous electronically commutated motor

Accessories


page 378

page 378

page 442

page 447

page 452

page 494

page 494

page 498

page 499

panel for the VUT 301 EV mini EC model. Both models are controllable from a remote controller (optional accessory).

Control and protection functions:

- Turning the unit on/off. Air supply to the electric heating elements during the unit shutdown.
- Three fans speeds are adjusted during the system setup.
- The heat exchanger downstream of the heat exchanger warms up supply air flow up to the comfortable temperature.
- Input for alarm signal from the fire fighting system.
- The supply fan is turned off in case of freezing danger for the period required for the heat exchanger defrosting.
- Relay input for connection of the CO_2 / humidity / IAQ or any other sensor that switches the unit to maximum speed.
- Filter clogging control by motor hours.
- Unit week schedule setting.

Controllable ventilation on demand:

The unit is equipped with a contact for relay signal from an external sensor. The unit operation according to an external sensor (for example, CO_2 sensor) enables energy demand reducing.

Operation logic of the unit with CO_2 sensor: An unoccupied ventilated premise has low CO_2 concentration and requires no intensive ventilation.

The unit operates at low speed for minimum permanent ventilation. As people come inside, CO_2 concentration in the premise increases and the signal from CO_2 sensor closes relay contact.

The unit is turned to maximum speed until CO_2 concentration in the room drops down and the contact is opened. After that the unit reverts to the previous operation speed.

To arrange this operating logic it is required to connect any sensor with relay output and to connect it to the respective unit input. The sensor is available upon separate order.

Mounting

The unit must be fixed to the wall with anchor bolts in a position that enables condensate drainage. While mounting the unit provide service access on the front panel side.

To ensure the correct supply air warming up function, install the duct temperature sensor in the supply air duct (included in the delivery set) not more than 1 m from the supply air duct end.

Extra accessories

CO2-1 or CO2-2 sensors are recommended for arrangement of automatic control of air capacity and extra energy saving.

Technical data:

	VUT 300/301 EV mini EC		
Speed	1	2	3
Voltage [V / Hz]	1~ 220-240 / 50-60		
Max. fan power [W]	16	94	187
Fan current [A]	0.1	0.6	1.1
Electric heater power [kW]	1.5		
Electric heater current [A]	6.5		
Total unit power [kW]	1.69		
Total unit current [A]	7.6		
Max. air capacity [m^3/h]	40	190	270
RPM [min^{-1}]	1280	2240	3200
Sound pressure level at 3 m [dBA]	28	39	42
Transported air temperature [°C]	from - 25 up to +60		
Casing material	polymer coated steel		
Insulation	15 mm (foiled polypropylene foam)		
Filter: extract / supply	bag type G4 / G4 (F7*) (order code SFK 300 EV/EVK mini EC G4 and SFK 300 EV/EVK mini EC F7		
Connected air duct diameter [mm]	∅ 125		
Weight [kg]	37		
Heat recovery efficiency	up to 95 %		
Heat exchanger type	counter-flow		
SEC class	A		
Heat exchanger material	polystyrene		

*modification

Technical data:

VENTS VUT 300/301 EV mini EC

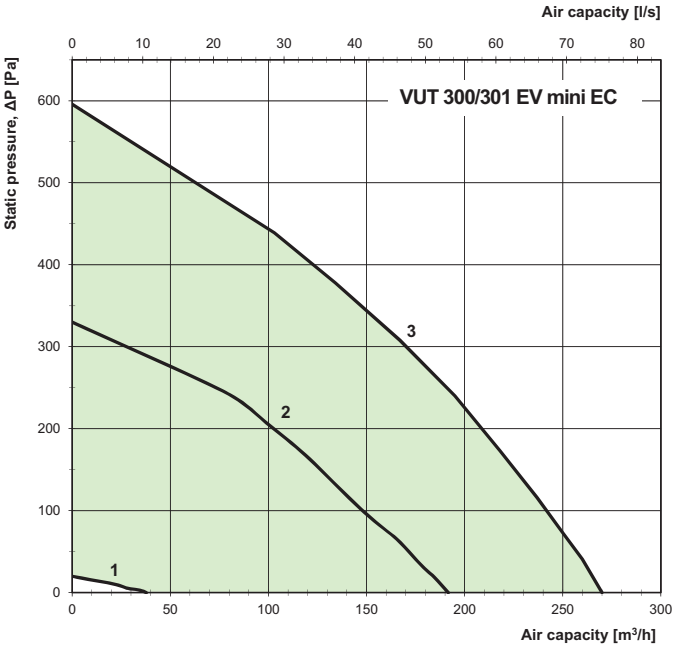

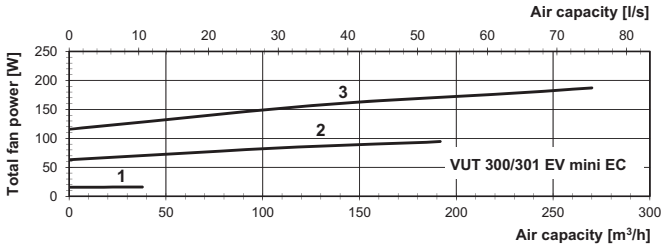

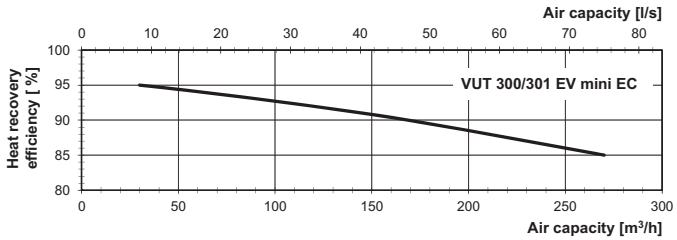

Sound pressure level		Octave-frequency band [Hz]								
	Hz	Gen	63	125	250	500	1000	2000	4000	8000
L_{wA} to inlet	dBA	58	27	41	50	55	52	47	43	34
L_{wA} to outlet	dBA	64	30	46	56	60	58	53	48	42
L_{wA} to environment	dBA	53	27	38	46	50	42	41	36	18

Overall dimensions:

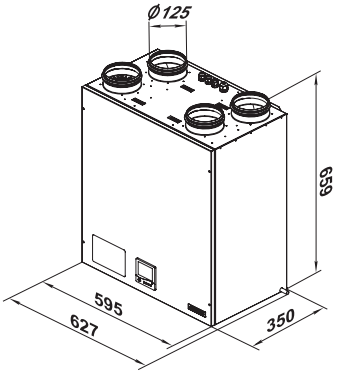

Unit design:

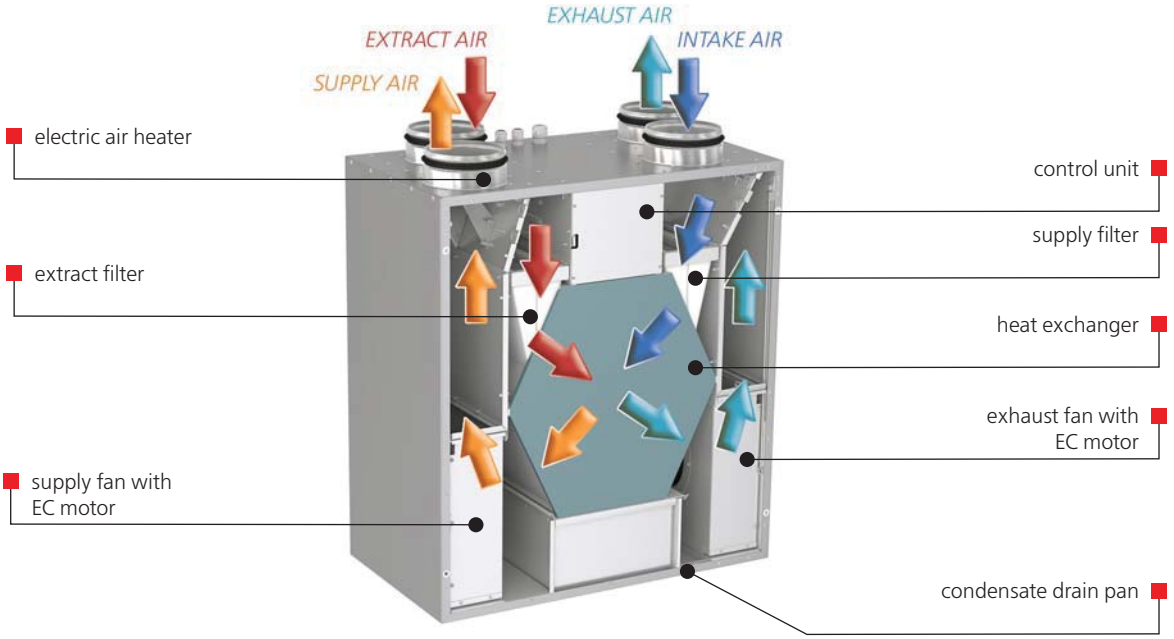

Application example:

