ERA®



Catalogue 2016

Graphic representation	Article	Name	Warehouse/ order	Weight individual	Box volume	Quantity of products	Gross weight	Size table
Декоративни метални панели за радиатори								
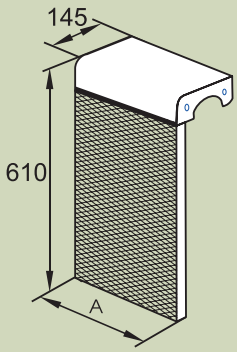	3 DMER	Decorative Metal Screen for 3-sectional heat radiator	W	1,03	0,058	10	10,9	
	3 DMER brown	Decorative Metal Screen for 3-sectional heat radiator						
	4 DMER	Decorative Metal Screen for 4-sectional heat radiator	W	1,24	0,074	10	13,1	
	4 DMER brown	Decorative Metal Screen for 4-sectional heat radiator						
	5 DMER	Decorative Metal Screen for 5-sectional heat radiator	W	1,45	0,091	10	15,3	
	5 DMER brown	Decorative Metal Screen for 5-sectional heat radiator						
	6 DMER	Decorative Metal Screen for 6-sectional heat radiator	W	1,66	0,109	10	17,5	
	6 DMER brown	Decorative Metal Screen for 6-sectional heat radiator						
	7 DMER	Decorative Metal Screen for 7-sectional heat radiator	W	1,87	0,126	10	19,7	
	7 DMER brown	Decorative Metal Screen for 7-sectional heat radiator						

Model	3DMER	4DMER	5DMER	6DMER	7DMER
Quantity of sections	3	4	5	6	7
A	290	390	490	590	690
Rib lath thickness	0,5	0,5	0,7	0,8	0,8

Framework metal thickness: 0,5

Ревизионни отвори DEKOFOT								
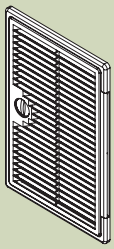	1510DF	Ventilated revision hatching doors DEKOFOT with bolt handle 150x100, plated mounting	W	0,056	0,027	90	5,52	
	1510DF Ivory	Ventilated revision hatching doors DEKOFOT with bolt handle 150x100, plated mounting						
	1515DF	Ventilated revision hatching doors DEKOFOT with bolt handle 150x150, plated mounting	W	0,07	0,027	70	5,38	
	1515DF Ivory	Ventilated revision hatching doors DEKOFOT with bolt handle 150x150, plated mounting						
	1520DF	Ventilated revision hatching doors DEKOFOT with bolt handle 150x200, plated mounting	W	0,091	0,038	70	6,9	
	1520DF Ivory	Ventilated revision hatching doors DEKOFOT with bolt handle 150x200, plated mounting						
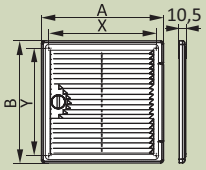	2025DF	Ventilated revision hatching doors DEKOFOT with bolt handle 200x250, plated mounting	W	0,148	0,038	45	7,19	
	2025DF Ivory	Ventilated revision hatching doors DEKOFOT with bolt handle 200x250, plated mounting						
	2030DF	Ventilated revision hatching doors DEKOFOT with bolt handle 200x300, plated mounting	W	0,169	0,038	40	7,29	
	2030DF Ivory	Ventilated revision hatching doors DEKOFOT with bolt handle 200x300, plated mounting						
	2525DF	Ventilated revision hatching doors DEKOFOT with bolt handle 250x250, plated mounting	W	0,168	0,054	45	8,16	
	2525DF Ivory	Ventilated revision hatching doors DEKOFOT with bolt handle 250x250, plated mounting						
	3030DF	Ventilated revision hatching doors DEKOFOT with bolt handle 300x300, plated mounting	W	0,338	0,054	28	10,064	
	3030DF Ivory	Ventilated revision hatching doors DEKOFOT with bolt handle 300x300, plated mounting						
	3040DF	Ventilated revision hatching doors DEKOFOT with bolt handle 300x400, plated mounting	W	0,312	0,054	30	10	
	3040DF Ivory	Ventilated revision hatching doors DEKOFOT with bolt handle 300x400, plated mounting						

Model	AxB	XxY
1510DF	150x100	120x70
1515DF	150x150	120x120
1520DF	150x200	120x170
2025DF	200x250	170x220
2030DF	200x300	170x270
2525DF	250x250	220x220
3030DF	300x300	270x270
3040DF	300x400	270x370

Ревизионни отвори								
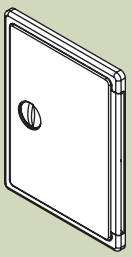	LT1510P	Revision hatching door with bolt handle 150x100, plated mounting	W	0,053	0,027	90	5,3	
	LT1510P Ivory	Revision hatching door with bolt handle 150x100, plated mounting						
	LT1515P	Revision hatching door with bolt handle 150x150, plated mounting	W	0,672	0,027	70	5,5	
	LT1515P Ivory	Revision hatching door with bolt handle 150x150, plated mounting						
	LT1520P	Revision hatching door with bolt handle 150x200, plated mounting	W	0,090	0,039	62	6,1	
	LT1520P Ivory	Revision hatching door with bolt handle 150x200, plated mounting						
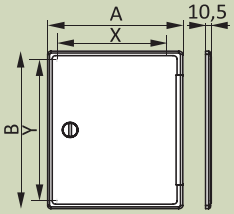	LT2025P	Revision hatching door with bolt handle 200x250, plated mounting	W	0,128	0,039	45	6,3	
	LT2025P Ivory	Revision hatching door with bolt handle 200x250, plated mounting						
	LT2030P	Revision hatching door with bolt handle 200x300, plated mounting	W	0,156	0,039	40	6,8	
	LT2030P Ivory	Revision hatching door with bolt handle 200x300, plated mounting						
	LT2525P	Revision hatching door with bolt handle 250x250, plated mounting	W	0,156	0,055	45	7,6	
	LT2525P Ivory	Revision hatching door with bolt handle 250x250, plated mounting						
	LT3030P	Revision hatching door with bolt handle 300x300, plated mounting	NEW!					
	LT3030P Ivory	Revision hatching door with bolt handle 300x300, plated mounting						
	LT3040P	Revision hatching door with bolt handle 300x400, plated mounting	W	0,312	0,054	30	10	
	LT3040P Ivory	Revision hatching door with bolt handle 300x400, plated mounting						

Model	AxB	XxY
LT1510P	150x100	120x70
LT1515P	150x150	120x120
LT1520P	150x200	120x170
LT2025P	200x250	170x220
LT2030P	200x300	170x270
LT2525P	250x250	220x220
LT3030P	300x300	270x270
LT3040P	300x400	270x370

Push -ревизионни отвори

Graphic representation	Article	Name	Warehouse/ order	Weight individual	Box volume	Quantity of products	Gross weight	Size table
	L1515	Push revision hatching door 168x168 with flange 146x146	W	0,094	0,027	32	3,488	
	L1515 oak	L1515 oak, Push revision hatching door168x168 with flange 146x146 ABS, decor						
	L1515 palisander	L1515 palisander, Push revision hatching door168x168 with flange 146x146 ABS, décor						
	L1515 black design	L1515 black design, Push revision hatching door168x168 with flange 146x146 ABS, décor						
	L1515 white design	L1515 white design, Push revision hatching door168x168 with flange 146x146 ABS, décor						
	L1515 dark gray metal	L1515 dmetal, Push revision hatching door168x168 with flange 146x146 ABS, décor						
	L1515 gray metal	L1515 gmetal, Push revision hatching door168x168 with flange 146x146 ABS, decor						
	L1515 Champagne	L1515 Champagne, Push revision hatching door168x168 with flange 146x146 ABS, décor						
	L1515 Chrome	L1515 Chrome, Push revision hatching door168x168 with flange 146x146 ABS, décor						
	L1515 Gold	L1515 Gold, Push revision hatching door168x168 with flange 146x146 ABS, decor						
	L1520	Push revision hatching door 168x218 with flange 146x196	W	0,124	0,038	32	4,498	
	L1520 oak	L1520 oak, Push revision hatching door168x218 with flange 146x196 ABS, decor						
	L1520 palisander	L1520 palisander, Push revision hatching door168x218 with flange 146x196 ABS, décor						
	L1520 black design	L1520 black design, Push revision hatching door168x218 with flange 146x196 ABS, décor						
	L1520 white design	L1520 white design, Push revision hatching door168x218 with flange 146x196 ABS, décor						
	L1520 dark gray metal	L1520 dmetal, Push revision hatching door168x218 with flange 146x196 ABS, décor						
	L1520 gray metal	L1520 gmetal, Push revision hatching door168x218 with flange 146x196 ABS, décor						
	L1520 Champagne	L1520 Champagne, Push revision hatching door168x218 with flange 146x196 ABS, décor						
	L1520 Chrome	L1520 Chrome, Push revision hatching door168x218 with flange 146x196 ABS, décor						
	L1520 Gold	L1520 Gold, Push revision hatching door168x218 with flange 146x196 ABS, décor						
	L1530	Push revision hatching door 168x318 with flange 146x296	W	0,161	0,038	25	4,555	
	L2020	Push revision hatching door 218x218 with flange 196x196	W	0,164	0,038	24	4,466	
	L2020 oak	L2020 oak, Push revision hatching door 218x218 with flange 196x196 ABS, décor						
	L2020 palisander	L2020 palisander, Push revision hatching door 218x218 with flange 196x196 ABS, décor						
	L2020 black design	L2020 black design, Push revision hatching door 218x218 with flange 196x196 ABS, décor						
	L2020 white design	L2020 white design, Push revision hatching door 218x218 with flange 196x196 ABS, décor						
	L2020 dark gray metal	L2020 dmetal, Push revision hatching door 218x218 with flange 196x196 ABS, décor						
	L2020 gray metal	L2020 gmetal, Push revision hatching door 218x218 with flange 196x196 ABS, décor						
	L2020 Champagne	L2020 Champagne, Push revision hatching door 218x218 with flange 196x196 ABS, décor						
	L2020 Chrome	L2020 Chrome, Push revision hatching door 218x218 with flange 196x196 ABS, décor						
	L2020 Gold	L2020 Gold, Push revision hatching door 218x218 with flange 196x196 ABS, décor						
	L2025	Push revision hatching door 218x268 with flange 196x246	W	0,19	0,054	26	5,54	
	L2025 dark gray metal	L2025 dmetal, Push revision hatching door 218x268 with flange 196x246 ABS, décor						
	L2025 gray metal	L2025 gray metal, Push revision hatching door 218x268 with flange 196x246 ABS, décor						
	L2025 Champagne	L2025 Champagne, Push revision hatching door 218x268 with flange 196x246 ABS, décor						
	L2025 Chrome	L2025 Chrome, Push revision hatching door 218x268 with flange 196x246 ABS, décor						
	L2025 Gold	L2025 Gold, Push revision hatching door 218x268 with flange 196x246 ABS, décor						
	L2030	Push revision hatching door 218x318 with flange 196x296	W	0,211	0,054	24	5,664	
	L2030 dark gray metal	L2030 dmetal, Push revision hatching door 218x318 with flange 196x296 ABS, décor						
	L2030 gray metal	L2030 gmetal, Push revision hatching door 218x318 with flange 196x296 ABS, décor						
	L2030 Champagne	L2030 Champagne, Push revision hatching door 218x318 with flange 196x296 ABS, décor						
	L2030 Chrome	L2030 Chrome, Push revision hatching door 218x318 with flange 196x296 ABS, décor						
	L2030 Gold	L2030 Gold, Push revision hatching door 218x318 with flange 196x296 ABS, décor						
	L2040	Push revision hatching door 218x418 with flange 196x396	W	0,286	0,082	20	6,48	
	L2040 dark gray metal	L2040 dmetal, Push revision hatching door 218x418 with flange 196x396 ABS, décor						
	L2040 gray metal	L2040 gmetal, Push revision hatching door 218x418 with flange 196x396 ABS, décor						
	L2040 Champagne	L2040 Champagne, Push revision hatching door 218x418 with flange 196x396 ABS, décor						
	L2040 Chrome	L2040 Chrome, Push revision hatching door 218x418 with flange 196x396 ABS, décor						
	L2040 Gold	L2040 Gold, Push revision hatching door 218x418 with flange 196x396 ABS, décor						
	L2530	Push revision hatching door 268x318 with flange 246x296	W	0,28	0,054	22	6,76	
	L2540	Push revision hatching door 268x418 with flange 246x396	W	0,352	0,082	20	7,8	
	L3030	Push revision hatching door 318x318 with flange 296x296	W	0,36	0,054	18	7,08	
	L3040	Push revision hatching door 318x418 with flange 296x396	W	0,458	0,082	18	9,004	
	L3050	Push revision hatching door 318x518 with flange 296x496	W	0,529	0,082	17	9,753	
	L3535	Push revision hatching door 368x368 with flange 346x346	W	0,398	0,055	14	6,2	

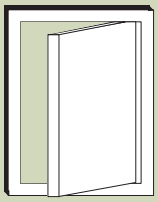

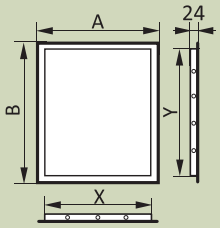

Model	AxB	XxY
L1515	168x168	146x146
L1520	168x218	146x196
L1530	168x318	146x296
L2020	218x218	196x196
L2025	218x268	196x246
L2030	218x318	196x296
L2040	218x418	196x396
L2530	268x318	246x296
L2540	268x418	246x396
L3030	318x318	296x296
L3040	318x418	296x396
L3050	318x518	296x496
L3535	368x368	346x346
L4040	396x426	366x396
L4050	426x526	396x496

Graphic representation	Article	Name	Warehouse/ order	Weight individual	Box volume	Quantity of products	Gross weight
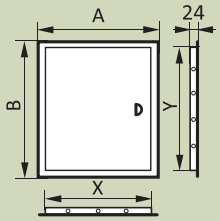	L1010R	Revision hatching door with handle 122x122 and flange 98x98	W	0,049	0,027	50	2,93
	L1015R	Revision hatching door with handle 122x172 and flange 98x148	W	NEW!			
	L1515R	Revision hatching door with handle 168x168 and flange 146x146	W	NEW!			
	L1520R	Revision hatching door with handle 168x218 and flange 146x196	W	NEW!			
	L1530R	Revision hatching door with handle 168x318 and flange 146x296	W	NEW!			
	L2020R	Revision hatching door with handle 218x218 and flange 196x196	W	NEW!			
	L2025R	Revision hatching door with handle 218x268 and flange 196x246	W	NEW!			
	L2030R	Revision hatching door with handle218x318 and flange 196x296	W	NEW!			
	L2040R	Revision hatching door with handle 218x418 and flange 196x396	W	NEW!			
	L2530R	Revision hatching door with handle 268x318 and flange 246x296	W	NEW!			
	L2540R	Revision hatching door with handle 268x418 and flange 246x396	W	0,352	0,082	20	7,8
	L3030R	Revision hatching door with handle 318x318 and flange 296x296	W	NEW!			
	L3040R	Revision hatching door with handle 318x418 and flange 296x396	W	NEW!			
	L3060R	Revision hatching door with handle 318x618 and flange 296x596	W	0,748	0,087	18	14,464
	L3535R	Revision hatching door with handle 368x368 and flange 346x346	W	0,398	0,055	14	6,172
	L4040R	Revision hatching door with handle 418x418 and flange 396x396	W	0,53	0,113	16	9,68
	L4050R	Revision hatching door with handle 418x518 and flange 396x496	W	0,795	0,12	15	12,925
	L4060R	Revision hatching door with handle 418x618 and flange 396x596	W	0,945	0,113	18	18,21
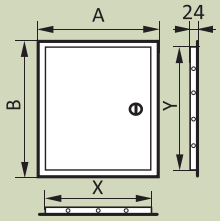	L1515Z	Л15153, Revision hatching door with lock 168x168 and flange 146x146	W	NEW!			
	L1520Z	Л15203, Revision hatching door with lock 168x218 and flange 146x196	W	NEW!			
	L1530Z	Л15303, Revision hatching door with lock 168x318 and flange 146x296	W	NEW!			
	L2020Z	Л20203, Revision hatching door with lock 218x218 and flange 196x196	W	NEW!			
	L2025Z	Л20253, Revision hatching door with lock 218x268 and flange 196x246	W	NEW!			
	L2030Z	Л20303, Revision hatching door with lock218x318 and flange 196x296	W	NEW!			
	L2040Z	Л20403, Revision hatching door with lock 218x418 and flange 196x396	W	NEW!			
	L2530Z	Л25303, Revision hatching door with lock 268x318 and flange 246x296	W	NEW!			
	L2540Z	Л25403, Revision hatching door with lock 268x418 and flange 246x396	W	0,362	0,082	20	8
	L3030Z	Л30303, Revision hatching door with lock 318x318 and flange 296x296	W	NEW!			
	L3040Z	Л30403, Revision hatching door with lock 318x418 and flange 296x396	W	NEW!			
	L3060Z	Л30603, Revision hatching door with lock 318x618 and flange 296x596	W	0,773	0,087	18	14,914
	L3535Z	Л35353, Revision hatching door with lock 368x368 and flange 346x346	W	0,423	0,055	14	6,522
	L4040Z	Л40403, Revision hatching door with lock 418x418 and flange 396x396	W	0,555	0,113	16	10,08
	L4050Z	Л40503, Revision hatching door with lock 418x518 and flange 396x496	W	0,83	0,12	15	13,45
	L4060Z	Л40603, Revision hatching door with lock 418x618 and flange 396x596	W	0,97	0,113	18	18,66

Size table

Model	AxB	XxY
L1010R	122x122	98x98
L1015R	122x172	98x148
L1515R	168x168	146x146
L1520R	168x218	146x196
L1530R	168x318	146x296
L2020R	218x218	196x196
L2025R	218x268	196x246
L2030R	218x318	196x296
L2040R	218x418	196x396
L2530R	268x318	246x296
L2540R	268x418	246x396
L3030R	318x318	296x296
L3040R	318x418	296x396
L3060R	318x618	296x596
L3535R	368x368	346x346
L4040R	418x418	396x396
L4050R	418x518	396x496
L4060R	418x618	396x596

Size table

Model	AxB	XxY
L1515Z	168x168	146x146
L1520Z	168x218	146x196
L1530Z	168x318	146x296
L2020Z	218x218	196x196
L2025Z	218x268	196x246
L2030Z	218x318	196x296
L2040Z	218x418	196x396
L2530Z	268x318	246x296
L2540Z	268x418	246x396
L3030Z	318x318	296x296
L3040Z	318x418	296x396
L3060Z	318x618	296x596
L3535Z	368x368	346x346
L4040Z	418x418	396x396
L4050Z	418x518	396x496
L4060Z	418x618	396x596

Типичен пример за вентилационна с-ма

Монтаж на нагнетателен конусен вентил

(в стена)

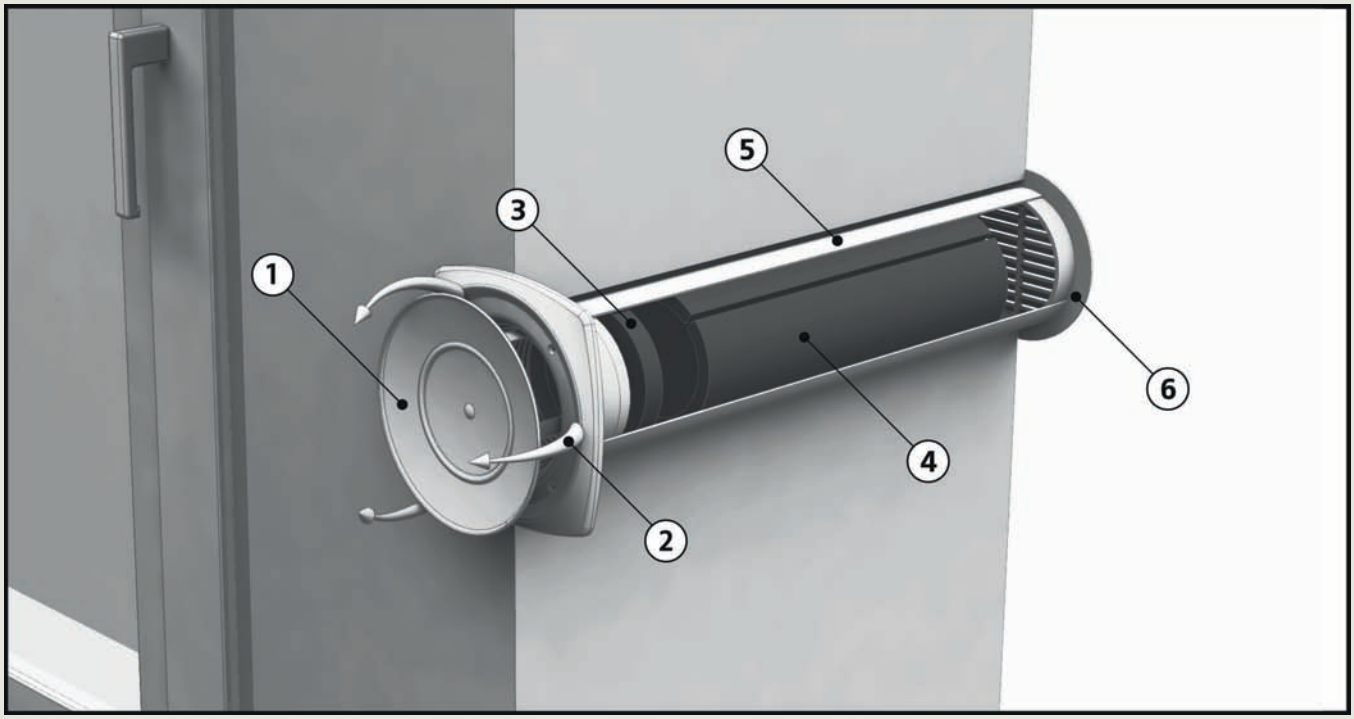

1. Декоративен панел, монтиращ се в помещението;
2. Въздушен поток;
3. Филтър;
4. Изолация;
5. Пластмасов въздуховод;
6. Външна решетка (външен дофузер).

Варианти за нагнетателни и смукателни конусни вентили

(серия «STREET LINE»)

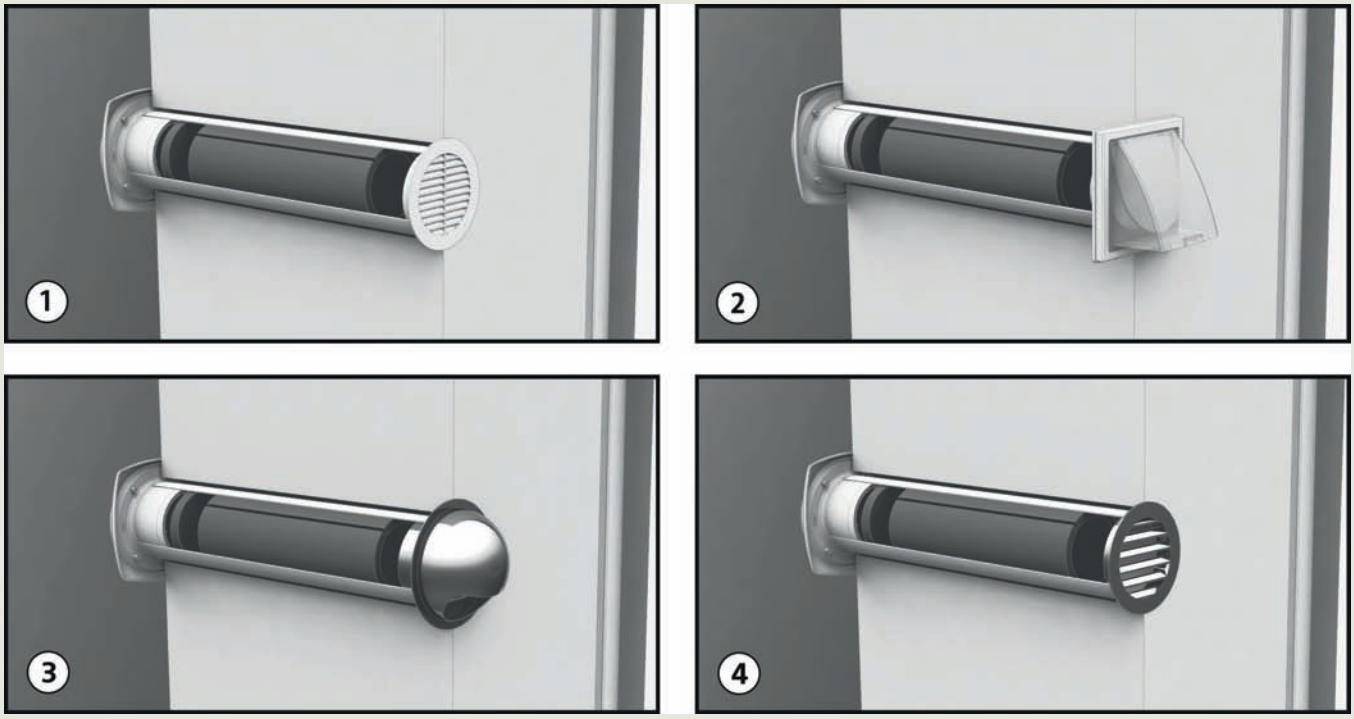

1. КР – външна решетка (ASA-пластмаса) + механизъм за контрол на дебита;
2. КР-02 - външна нагнетателна решетка (ASA-пластмаса) + механизъм за контрол на дебита
3. КР-03 - външна нагнетателна решетка (стоманена) + механизъм за контрол на дебита;
4. КР – външна решетка (алуминиева) + механизъм за контрол на дебита.

Типичен пример за изграждане на вентилационна с-ма

WC помещение

(пример за монтаж на осов вентилатор PROFIT)

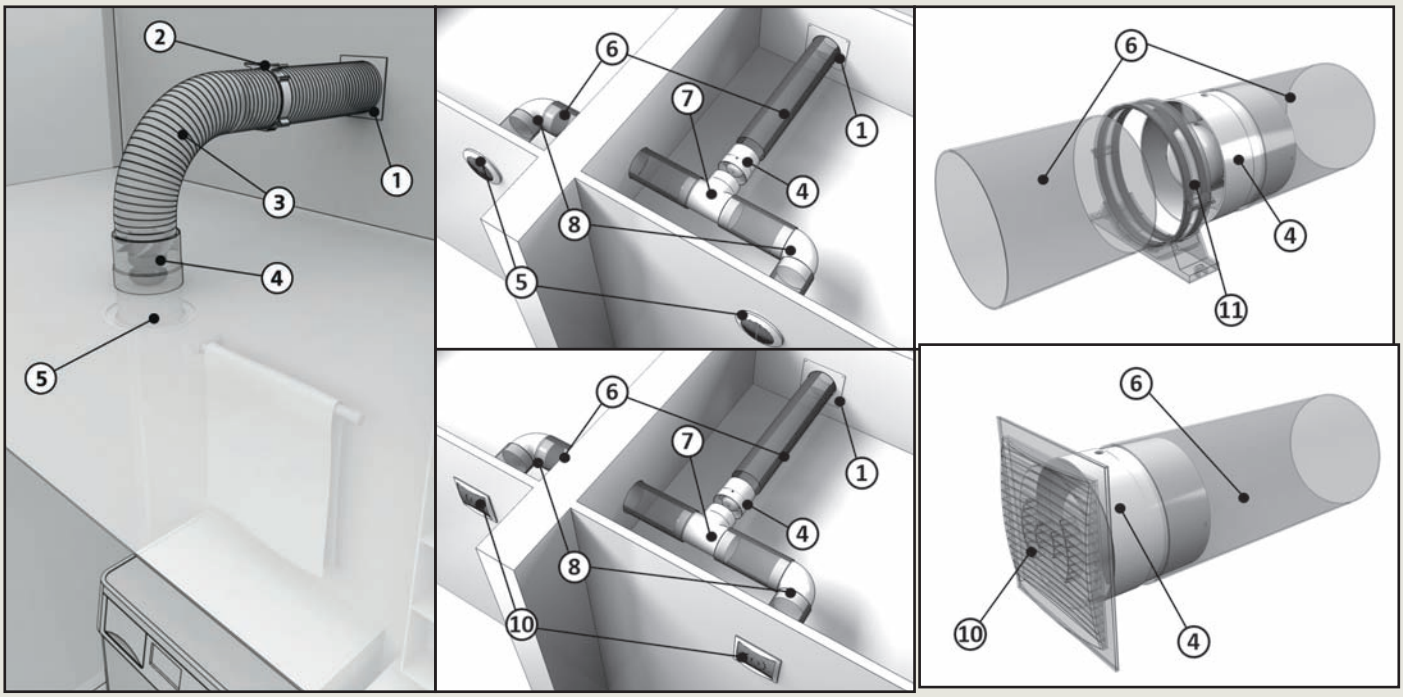

1. Планка за кръгъл въздуховод (NKP);
2. Скоба (DKP);
3. Блиндиран гъвкав въздуховод (VA);
4. Осов вентилатор (PROFIT);
5. Нагнетателна решетка (RKF);
6. Кръгъл въздуховод (VP);
7. Т-връзка (TP);
8. Коляно (KKP);
9. Нагнетателна решетка (RPKF);
10. Нагнетателна решетка (RCF);
11. Конектор за кръгли въздуховоди (DSKP).

Кухня

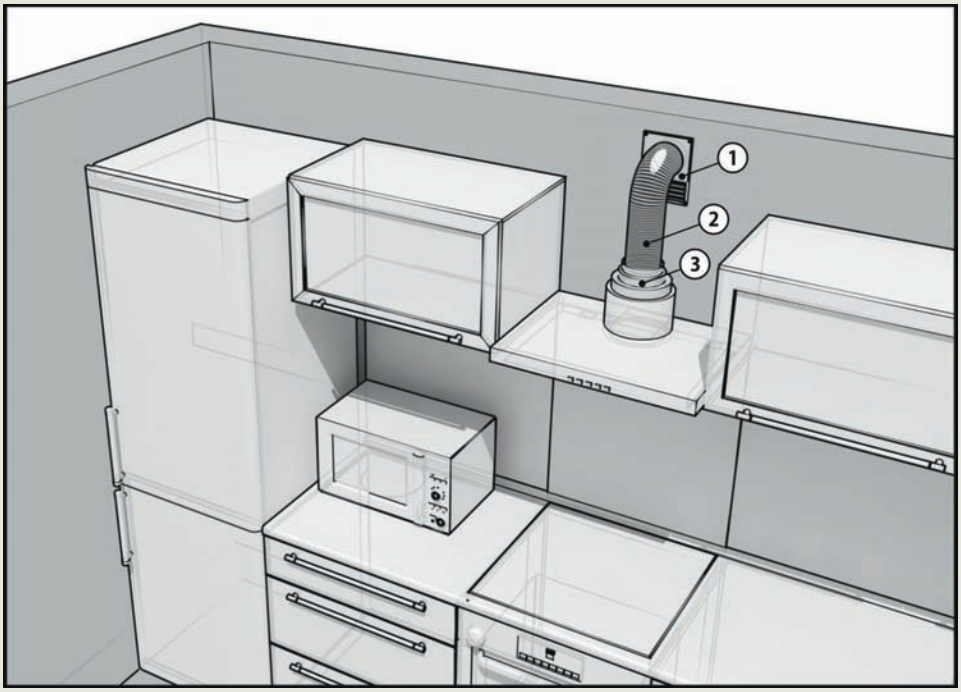

1. Нагнетателна решетка с въздуховод (RU);
2. Гъвкав алуминиев въздуховод (VA);
3. Конектор за кръгли въздуховоди (PU).

Типичен пример за вентилационна с-ма

Кухня

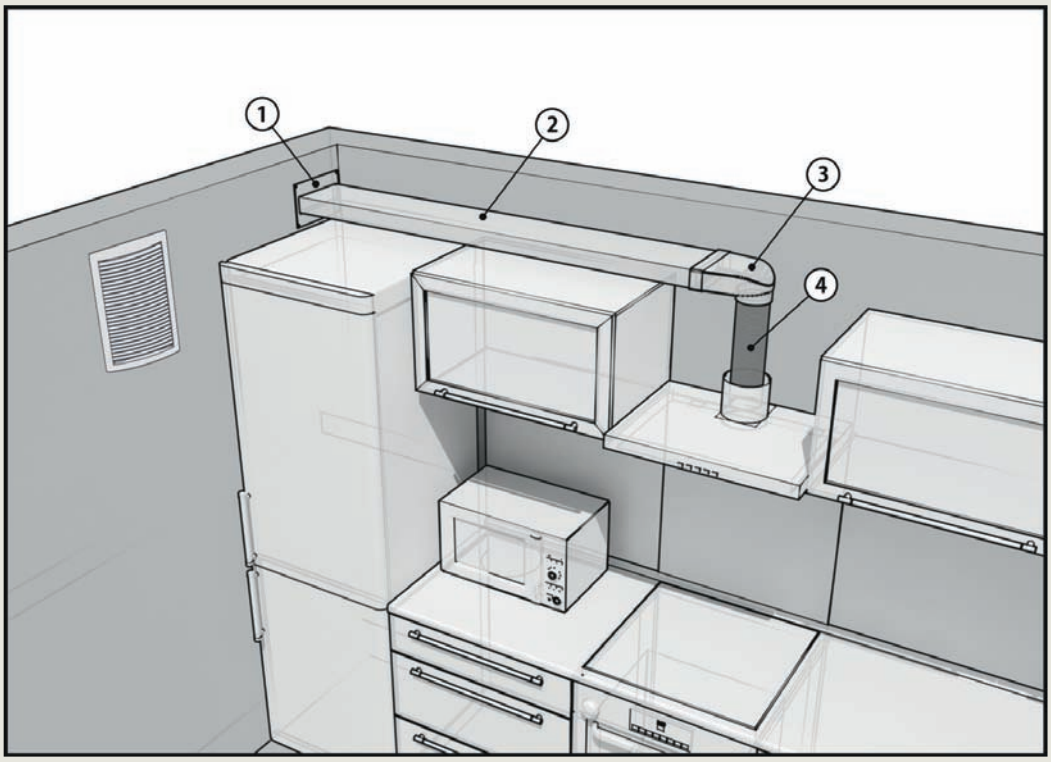

1. Подложка за правоъгълни въздуховоди (NPP);
2. Правоъгълен въздуховод (VP);
3. Конектор за плосък въздуховод с дифузер (SKFP);
4. Алуминиев гъвкав въздуховод (VA).

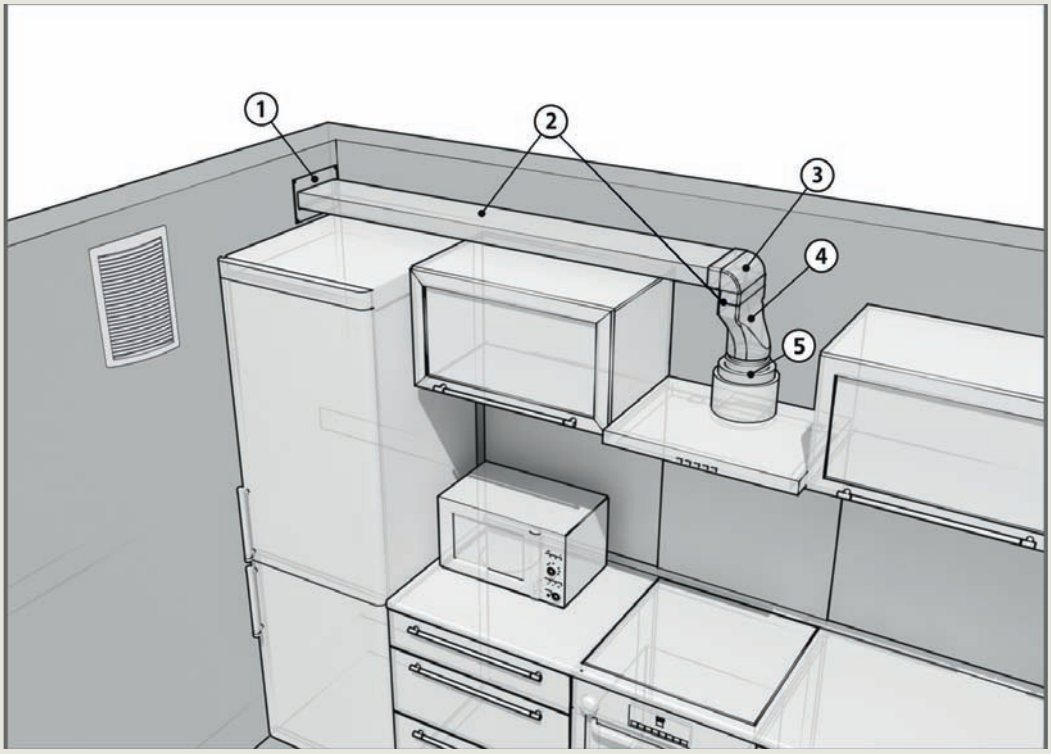

1. Подложка за правоъгълни въздуховоди (NPP);
2. Правоъгълен въздуховод (VP);
3. Правоъгълно коляно (KVP);
4. Плоско-кръгъл адаптор (SPKP);
5. Редукция (PU).

Типичен пример за изграждане на вентилационна с-ма

WC помещение

(вентилатор, решетка за врата)

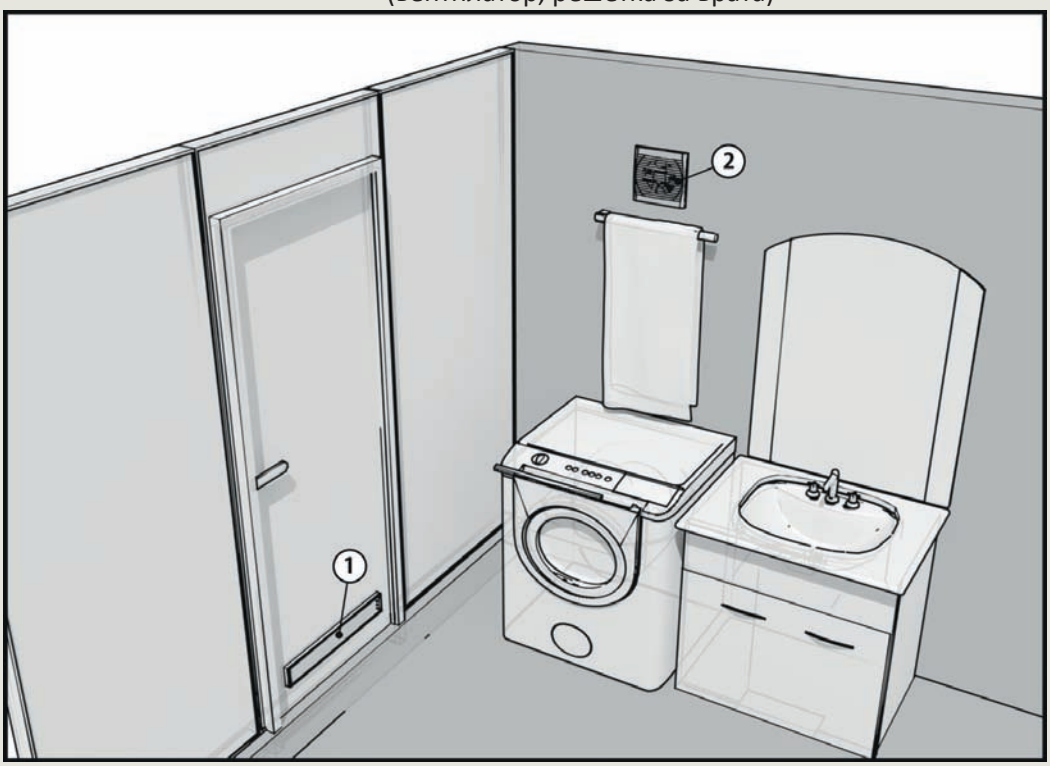

1. Решетка за врата (DP);
2. Вентилатор.

WC помещение

(конусен вентил, окачен таван)

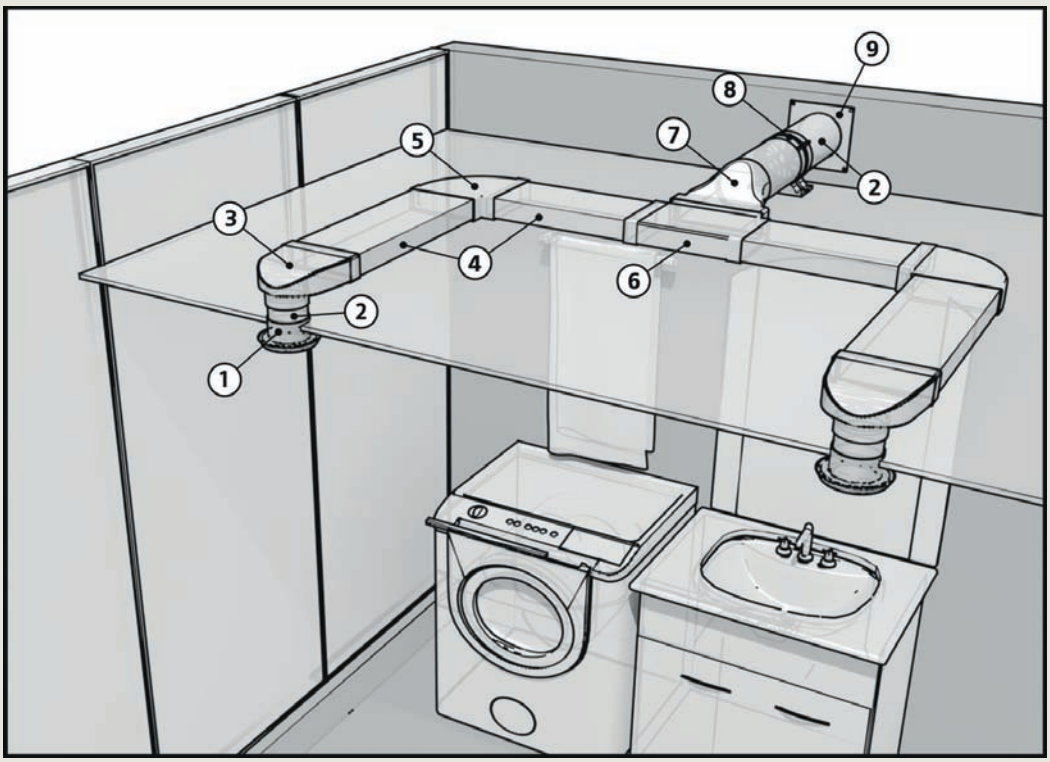

1. Нагнетателен конусен вентил (AVP);
2. Кръгъл въздуховод (VP);
3. Плосък конектор с фланец за дифузер (SKFP);
4. Плосък въздуховод (VP);
5. Хоризонтално коляно (KGP);
6. Плоска Т-връзка (TTP);
7. Плоско-кръгъл адаптор (CPKP);
8. Вентилатор (PRO);
9. Подложка за кръгъл въздуховод (NKP)

Типичен пример за вентилационна с-ма

WC помещение

(WC отделно помещение, два вентилационни извода)

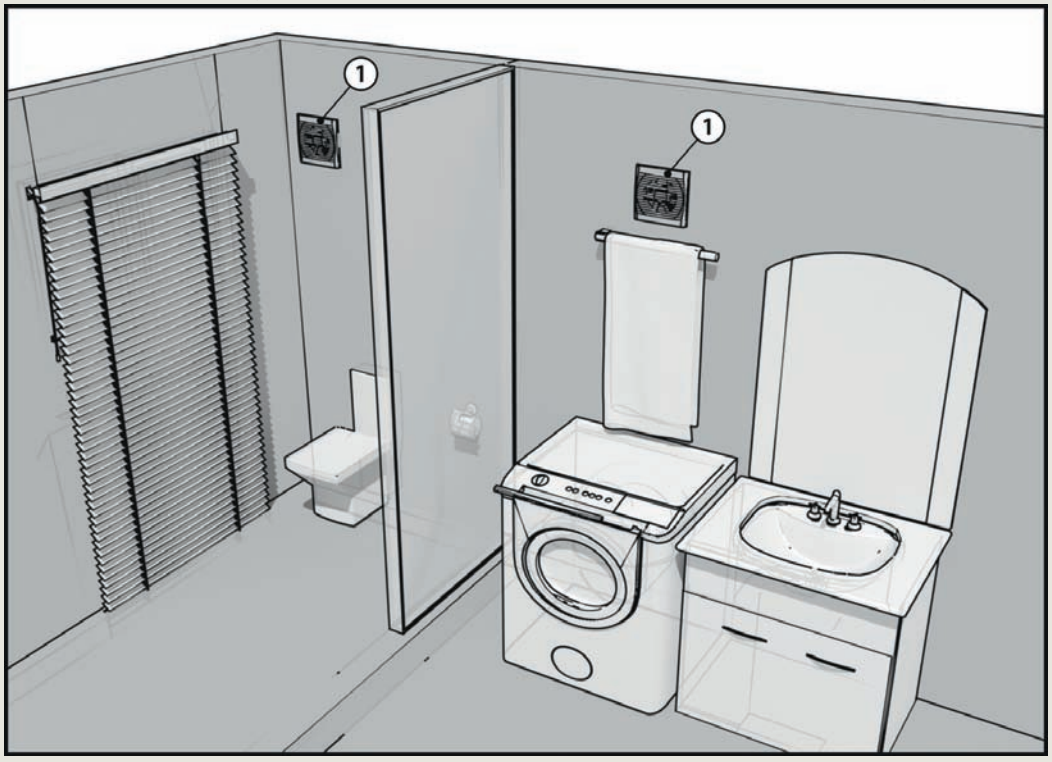

1.Вентилатор

WC помещение

(WC едно помещение, два вентилационни извода)

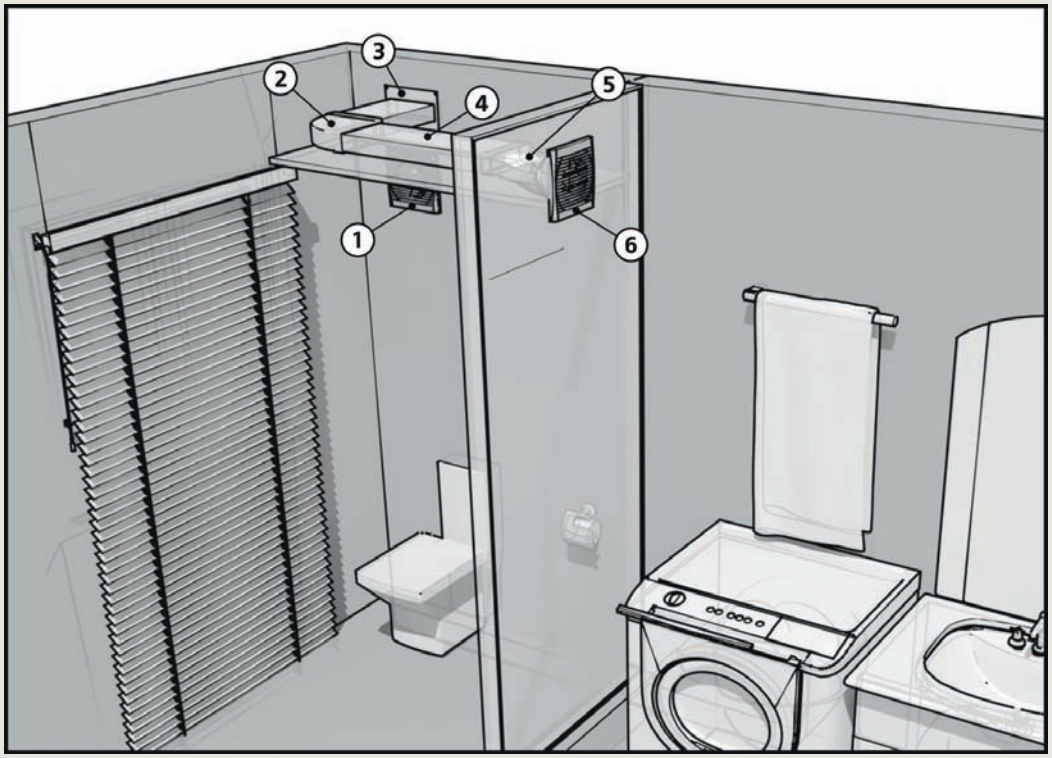

1. Вентилатор
2. Хоризонтално коляно (KGP);
3. Подложка за плосък въздуховод (NNP);
4. Плосък въздуховод (VP);
5. Плоско-кръгъл конектор (SPKP);
6. Вентилатор.

Типичен пример за изграждане на вентилационна с-ма

Офис

(конусен вентил, окачен таван)

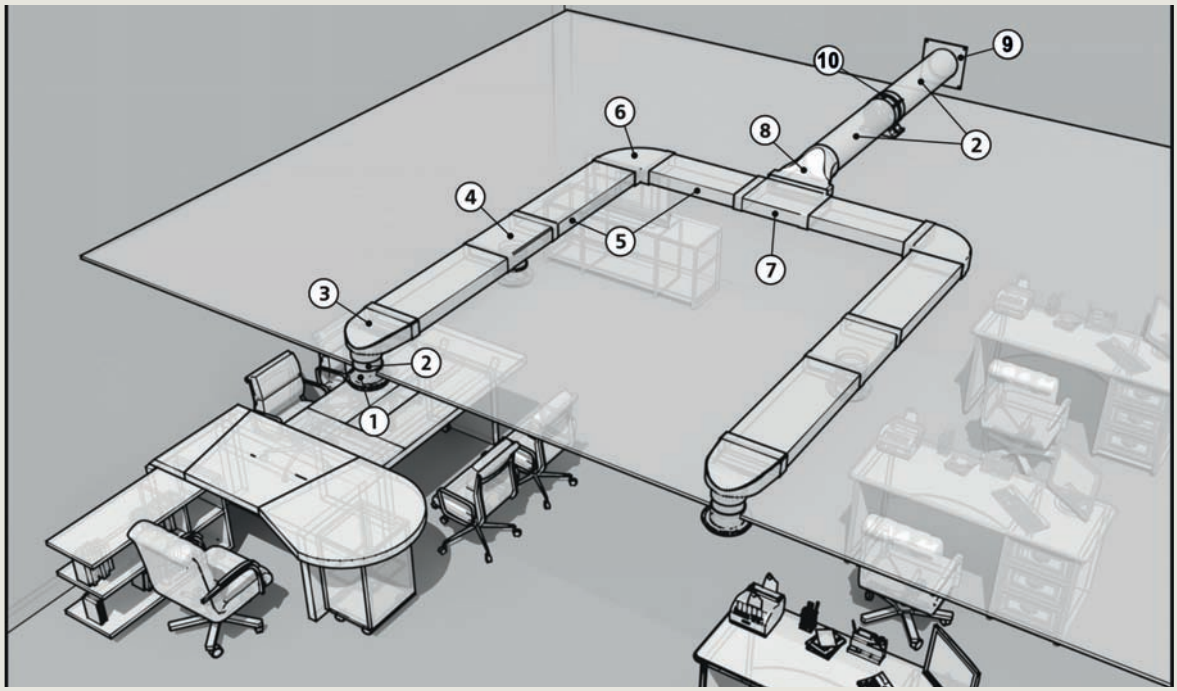

1. Нагнетателен конусен вентил (AVP);
2. Кръгъл въздуховод(VP);
3. Плосък адаптор с фланец за дифузер (SKFP);
4. Плосък конектор с фланец за дифузер (TFP);
5. Плосък въздуховод (VP);
6. Хоризонтално коляно (KGP);
7. Плоска Т-връзка (TPP);
8. Плоско-кръгъл адаптор (SPKP);
9. Подложка за кръгъл въздуховод (NKP);
10. Вентилатор (PRO).

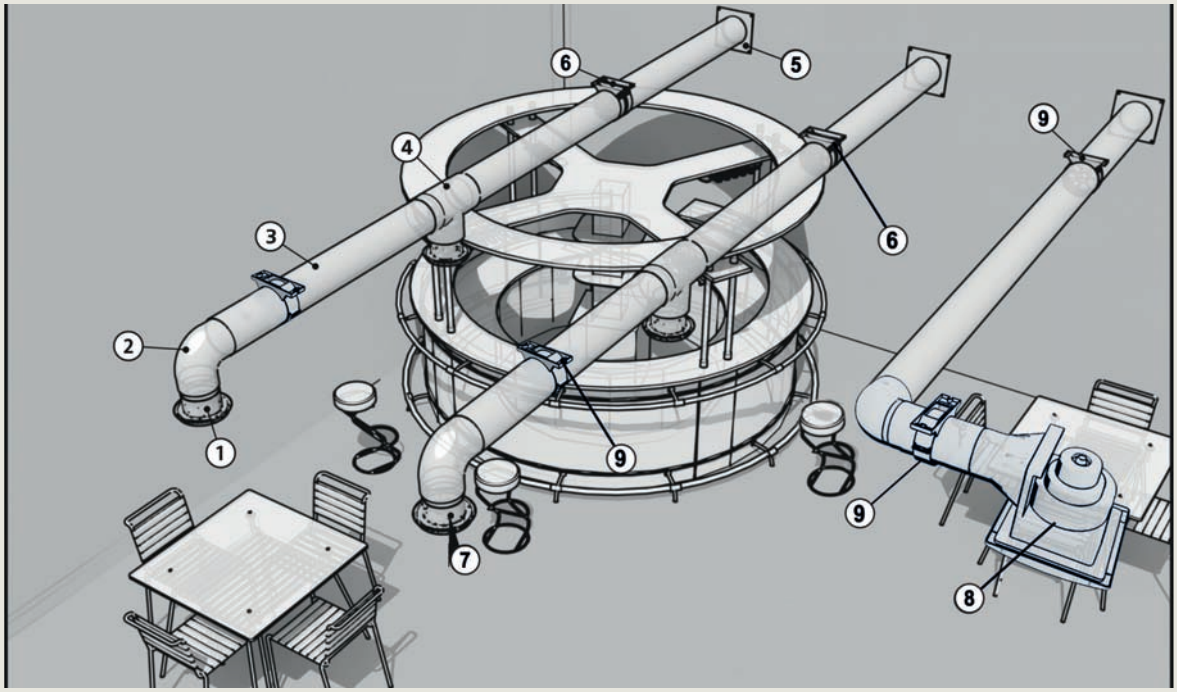

1. Нагнетателен конусен вентил (AVP);
2. Кръгло коляно (KKP);
3. Кръгъл въздуховод (VP);
4. Кръгло съединение (TP);
5. Подложка за кръгли въздуховоди (NKP)
6. Вентилатор (PRO);
7. Нагнетателен конусен вентил (APP);
8. Центробежен вентилатор (NVF);
9. Държач (DSKP)

ERA

Reliable supplier

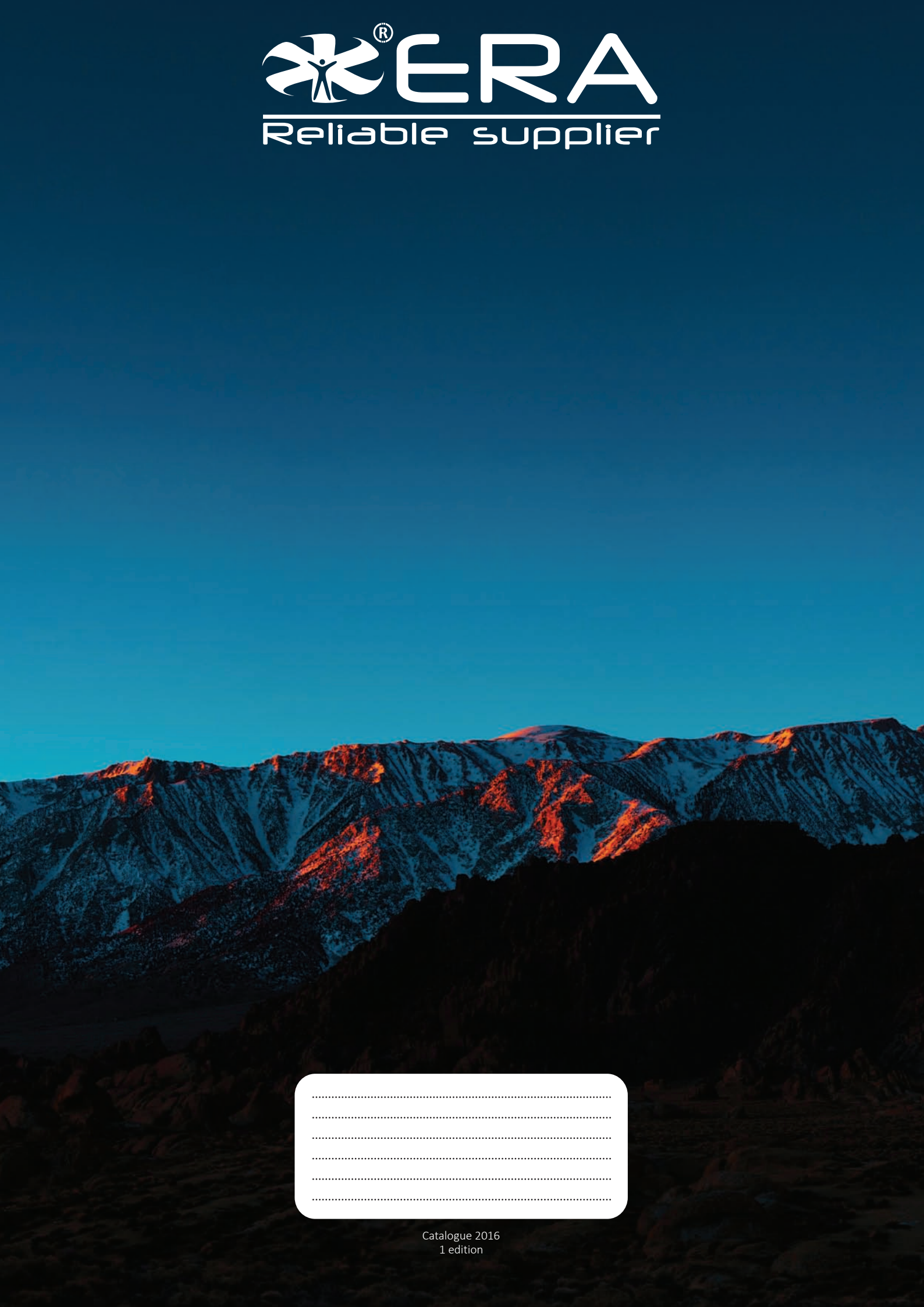

Catalogue 2016
1 edition