ERA®



Catalogue 2016

street line Серия за външен монтаж: решетки

Graphic representation	Article	Name	Warehouse/ order	Weight individual	Box volume	Quantity of products	Gross weight	Size table
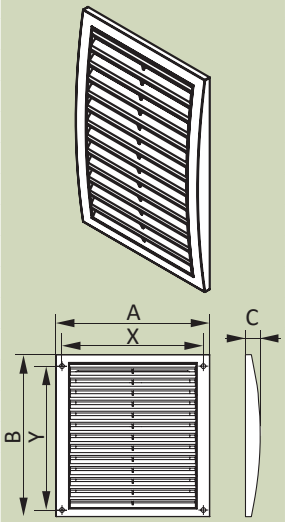	1515RRN	Outside detachable grill 150x150, ASA plastic	W	0,062	0,027	50	3,08	
	1515RRN brown	Outside detachable grill 150x150, ASA plastic						
	1515PPH terracotta	Outside detachable grill 150x150, ASA plastic						
	1515RRN grey	Outside detachable grill 150x150, ASA plastic						
	1515RRN Ivory	Outside detachable grill 150x150, ASA plastic						
	1825RRN	Outside detachable grill 180x250, ASA plastic	NEW!					
	1825RRN brown	Outside detachable grill 180x250, ASA plastic						
	1825PPH terracotta	Outside detachable grill 180x250, ASA plastic						
	1825RRN grey	Outside detachable grill 180x250, ASA plastic						
	1825RRN Ivory	Outside detachable grill 180x250, ASA plastic						
	2020RRN	Outside detachable grill 200x200, ASA plastic	W	0,097	0,038	40	4,41	
	2020RRN brown	Outside detachable grill 200x200, ASA plastic						
	2020RRN terracotta	Outside detachable grill 200x200, ASA plastic						
	2020RRN grey	Outside detachable grill 200x200, ASA plastic						
	2020RRN Ivory	Outside detachable grill 200x200, ASA plastic						
	2030RRN	Outside detachable grill 200x300, ASA plastic	W	0,149	0,054	30	5,07	
	2030RRN brown	Outside detachable grill 200x300, ASA plastic						
	2030RRN terracotta	Outside detachable grill 200x300, ASA plastic						
	2030RRN grey	Outside detachable grill 200x300, ASA plastic						
	2030RRN Ivory	Outside detachable grill 200x300, ASA plastic						
	2525RRN	Outside detachable grill 250x250, ASA plastic	W	0,179	0,054	34	6,686	
	2525RRN brown	Outside detachable grill 250x250, ASA plastic						
	2525RRN terracotta	Outside detachable grill 250x250, ASA plastic						
	2525RRN grey	Outside detachable grill 250x250, ASA plastic						
	2525RRN Ivory	Outside detachable grill 250x250, ASA plastic						
	3535RRN	Outside detachable grill 350x350, ASA plastic	W	0,338	0,054	18	6,684	
	3535RRN brown	Outside detachable grill 350x350, ASA plastic						
	3535RRN terracotta	Outside detachable grill 350x350, ASA plastic						
	3535RRN grey	Outside detachable grill 350x350, ASA plastic						
	3535RRN Ivory	Outside detachable grill 350x350, ASA plastic						

Model	1515RRN	2020RRN	2030RRN	2525RRN	3535RRN
A	150	200	200	250	350
B	150	200	300	250	350
X	115	152	152	202	302
Y	116	156	256	206	306
C	12	14	20	17	22

Graphic representation	Article	Name	Warehouse/ order	Weight individual	Box volume	Quantity of products	Gross weight	Size table
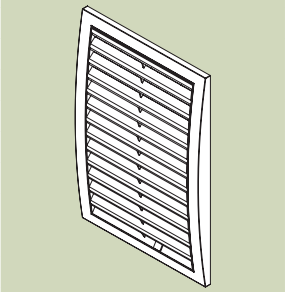	1515RRPN	Outside adjustable detachable grill 150x150, ASA plastic	W	0,089	0,027	50	4,43	
	1515RRPN brown.	Outside adjustable detachable grill 150x150, ASA plastic						
	1515RRPN terracotta	Outside adjustable detachable grill 150x150, ASA plastic						
	1515RRPN grey	Outside adjustable detachable grill 150x150, ASA plastic						
	1515RRPN Ivory	Outside adjustable detachable grill 150x150, ASA plastic						
	1825RRPN	Outside adjustable detachable grill 180x250, ASA plastic	NEW!					
	1825RRPN brown	Outside adjustable detachable grill 180x250, ASA plastic						
	1825RRPN terracotta	Outside adjustable detachable grill 180x250, ASA plastic						
	1825RRPN grey	Outside adjustable detachable grill 180x250, ASA plastic						
	1825RRPN Ivory	Outside adjustable detachable grill 180x250, ASA plastic						
	2020RRPN	Outside adjustable detachable grill 200x200, ASA plastic	W	0,143	0,038	40	6,25	
	2020RRPN brown	Outside adjustable detachable grill 200x200, ASA plastic						
	2020RRPN terracotta	Outside adjustable detachable grill 200x200, ASA plastic						
	2020RRPN grey	Outside adjustable detachable grill 200x200, ASA plastic						
	2020RRPN Ivory	Outside adjustable detachable grill 200x200, ASA plastic						
	2030RRPN	Outside adjustable detachable grill 200x300, ASA plastic	W	0,231	0,054	30	7,53	
	2030RRPN brown	Outside adjustable detachable grill 200x300, ASA plastic						
	2030RRPN terracotta	Outside adjustable detachable grill 200x300, ASA plastic						
	2030RRPN grey	Outside adjustable detachable grill 200x300, ASA plastic						
	2030RRPN Ivory	Outside adjustable detachable grill 200x300, ASA plastic						
	2525RRPN	Outside adjustable detachable grill 250x250, ASA plastic	W	0,258	0,054	34	9,372	
	2525RRPN brown	Outside adjustable detachable grill 250x250, ASA plastic						
	2525RRPN terracotta	Outside adjustable detachable grill 250x250, ASA plastic						
	2525RRPN grey	Outside adjustable detachable grill 250x250, ASA plastic						
	2525RRPN Ivory	Outside adjustable detachable grill 250x250, ASA plastic						
	3535RRPN	Outside adjustable detachable grill 350x350, ASA plastic	W	0,561	0,054	18	10,69	
	3535RRPN brown	Outside adjustable detachable grill 350x350, ASA plastic						
	3535RRPN terracotta	Outside adjustable detachable grill 350x350, ASA plastic						
	3535RRPN grey	Outside adjustable detachable grill 350x350, ASA plastic						
	3535RRPN Ivory	Outside adjustable detachable grill 350x350, ASA plastic						



Model	1515RRPN	2020RRPN	2030RRPN	2525RRPN	3535RRPN
A	150	200	200	250	350
B	150	200	300	250	350
X	115	152	152	202	302
Y	116	156	256	206	306
C	12	14	20	17	22

Graphic representation	Article	Name	Warehouse/ order	Weight individual	Box volume	Quantity of products	Gross weight	Size table
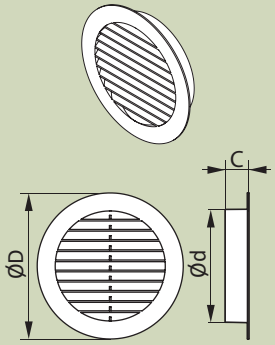	10RKN	Outside round grill D130 with flange D100, ASA plastic	W	0,048	0,027	55	3,12	
	10RKN grey	Outside round grill D130 with flange D100, ASA plastic						
	10RKN light grey	Outside round grill D130 with flange D100, ASA plastic						
	10RKN terracotta	Outside round grill D130 with flange D100, ASA plastic						
	10RKN brown	Outside round grill D130 with flange D100, ASA plastic						
	10RKN Ivory	Outside round grill D130 with flange D100, ASA plastic						
	12RKN	Outside round grill D150 with flange D125, ASA plastic	W	0,063	0,027	34	2,622	
	12RKN grey	Outside round grill D150 with flange D125, ASA plastic						
	12RKN light grey	Outside round grill D150 with flange D125, ASA plastic						
	12RKN terracotta	Outside round grill D150 with flange D125, ASA plastic						
	12RKN brown	Outside round grill D150 with flange D125, ASA plastic						
	12RKN Ivory	Outside round grill D150 with flange D125, ASA plastic						
	15RKN	Outside round grill D200 with flange D150, ASA plastic	W	0,121	0,038	35	4,765	
	15RKN grey	Outside round grill D200 with flange D150, ASA plastic						
	15RKN light grey	Outside round grill D200 with flange D150, ASA plastic						
	15RKN terracotta	Outside round grill D200 with flange D150, ASA plastic						
	15RKN brown	Outside round grill D200 with flange D150, ASA plastic						
	15RKN Ivory	Outside round grill D200 with flange D150, ASA plastic						
	16RKN	Outside round grill D200 with flange D160, ASA plastic	W	0,085	0,038	35	3,505	
	16RKN grey	Outside round grill D200 with flange D160, ASA plastic						
	16RKN light grey	Outside round grill D200 with flange D160, ASA plastic						
	16RKN terracotta	Outside round grill D200 with flange D160, ASA plastic						
	16RKN brown	Outside round grill D200 with flange D160, ASA plastic						
	16RKN Ivory	Outside round grill D200 with flange D160, ASA plastic						
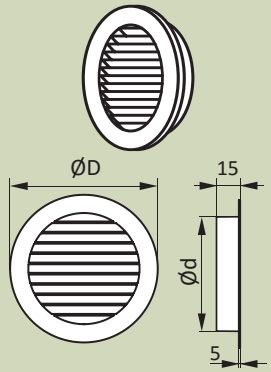	10RKM	Outside round grill with screen D125 with flange D100, Aluminum	W	0,14	0,019	45	6,58	
	12,5RKM	Outside round grill with screen D150 with flange D125, Aluminum	W	0,168	0,019	32	5,656	
	16RKM	Outside round grill with screen D185 with flange D160, Aluminum	W	0,272	0,019	25	7,08	
	20RKM	Outside round grill with screen D225 with flange D200, Aluminum	W	0,403	0,019	14	5,922	
	25RKM	Outside round grill with screen D275 with flange D250, Aluminum	W	0,715	0,038	12	9,11	
	31,5RKM	Outside round grill with screen D350 with flange D315, Aluminum	W	1,226	0,038	10	12,79	

Model	10RKN	12RKN	15RKN	16RKN
d	100	125	150	160
D	130	150	200	200
C	21	21	22	21

Model	10RKM	12,5RKM	16RKM	20RKM	25RKM	31,5RKM
d	100	125	160	200	250	315
D	125	150	185	225	275	350

Graphic representation	Article	Name	Warehouse/ order	Weight individual	Box volume	Quantity of products	Gross weight	Size table
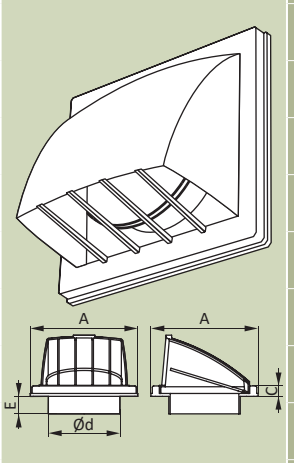	1515K10FV	Exhaust wall outlet with back valve 150x150 with flange D100, ASA plastic	W	0,196	0,054	20	4,52	
	1515K10FV (beige)	Exhaust wall outlet with back valve 150x150 with flange D100, beige, ASA plastic	W					
	1515K10FV brown	Exhaust wall outlet with back valve 150x150 with flange D100, brown, ASA plastic	W					
	1515K10FV grey	Exhaust wall outlet with back valve 150x150 with flange D100, grey, ASA plastic	W					
	1515K10FV terracotta	Exhaust wall outlet with back valve 150x150 with flange D100, terracotta, ASA plastic	W					
	1515K10FV Ivory	Exhaust wall outlet with back valve 150x150 with flange D100, Ivory, ASA plastic	W					
	2121K12,5FV	Exhaust wall outlet with back valve 212x212 with flange D125, ASA plastic	W	0,346	0,082	12	4,912	
	2121K12,5FV (beige)	Exhaust wall outlet with back valve 212x212 with flange D125, beige, ASA plastic	W					
	2121K12,5FV brown	Exhaust wall outlet with back valve 212x212 with flange D125, brown, ASA plastic	W					
	2121K12,5FV grey	Exhaust wall outlet with back valve 212x212 with flange D125, grey, ASA plastic	W					
	2121K12,5FV terracotta	Exhaust wall outlet with back valve 212x212 with flange D125, terracotta, ASA plastic	W					
	2121K12,5FV Ivory	Exhaust wall outlet with back valve 212x212 with flange D125, Ivory, ASA plastic	W					
	2121K16FV	Exhaust wall outlet with back valve 212x212 with flange D160, ASA plastic	W	0,353	0,082	12	4,996	
	2121K16FV (brown)	Exhaust wall outlet with back valve 212x212 with flange D160, brown, ASA plastic	W					
	2121K16FV (beige)	Exhaust wall outlet with back valve 212x212 with flange D160,beige, ASA plastic	W					
	2121K16FV grey	Exhaust wall outlet with back valve 212x212 with flange D160, grey, ASA plastic	W					
	2121K16FV terracotta	Exhaust wall outlet with back valve 212x212 with flange D160,terracotta, ASA plastic	W					
	2121K16FV Ivory	Exhaust wall outlet with back valve 212x212 with flange D160, Ivory, ASA plastic	W					

Model	1515K10FV	2121K12,5FV	2121K16FV
A	150	212	212
d	100	125	160
E	25	25	25
C	14,5	20	20

Graphic representation	Article	Name	Warehouse/ order	Weight individual	Box volume	Quantity of products	Gross weight	Size table
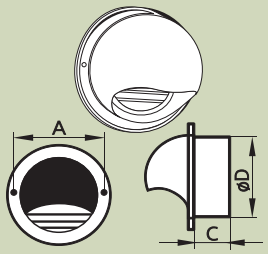	10VM	Exhaust wall outlet with flange D100, stainless steel	W	0,155	0,038	18	3,32	
	12,5VM	Exhaust wall outlet with flange D125, stainless steel	W	0,25	0,038	8	2,53	
	15VM	Exhaust wall outlet with flange D150, stainless steel	W	0,32	0,097	12	4,64	
	16VM	Exhaust wall outlet with flange D160, stainless steel	W	0,325	0,097	12	4,7	

Model	10VM	12,5VM	15VM	16VM
A	133	165	192	192
D	100	125	150	160
C	52	52	62	62

Graphic representation	Article	Name	Warehouse/ order	Weight individual	Box volume	Quantity of products	Gross weight	Size table
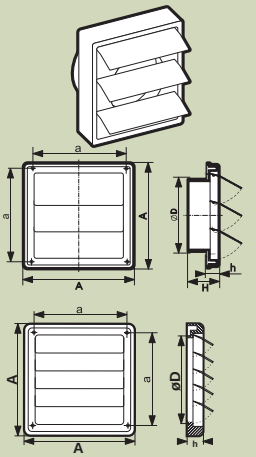	1515K10F	Exhaust grill with gravitational louvers 150x150 with flange D100, white, ASA plastic	W	0,105	0,054	44	5,22	
	1515K10F beige	Exhaust grill with gravitational louvers 150x150 with flange D100, beige, ASA plastic	W					
	1515K10F grey	Exhaust grill with gravitational louvers 150x150 with flange D100, grey, ASA plastic	W					
	2121K12,5F	Exhaust grill with gravitational louvers 212x212 with flange D125, white, ASA plastic	W	0,206	0,038	18	4,238	
	2121K12,5F grey	Exhaust grill with gravitational louvers 212x212 with flange D125, grey, ASA plastic	W					
	2121K16F	Exhaust grill with gravitational louvers 212x212 with flange D160, white, ASA plastic	W	0,213	0,038	16	3,938	
	2121K16F grey	Exhaust grill with gravitational louvers 212x212 with flange D160, grey, ASA plastic	W					
	2424K20F grey	Exhaust grill with gravitational louvers 242x242 with flange D200, grey, ASA plastic	W	0,263	0,027	20	5,7	
	2929K25F grey	Exhaust grill with gravitational louvers 294x294 with flange D250, grey, ASA plastic	W	0,406	0,049	20	8,84	
	3636K31,5F grey	Exhaust grill with gravitational louvers 360x360 with flange D315, grey, ASA plastic	W	0,545	0,037	10	5,9	
	4141K35,5F grey	Exhaust grill with gravitational louvers 410x410 with flange D355, grey, ASA plastic	W	0,661	0,048	10	7,5	
	4646K40F grey	Exhaust grill with gravitational louvers 456x456 with flange D400, grey, ASA plastic	W	0,825	0,066	10	9,1	

Model	1515K10F	2121K12,5F	2121K16F
A	150	212	212
a	105	150	150
D	100	125	160
H	39	45	45
h	14,5	20	20

Model	2424K20F grey	2929K25F grey	3636K31,5F grey	4141K35,5F grey	4646K40F grey
A	242	294	360	410	456
a	215	265	325	371	415
D	200	250	315	355	400
h	20	25	25	25	27

Типичен пример за вентилационна с-ма

Монтаж на нагнетателен конусен вентил

(в стена)

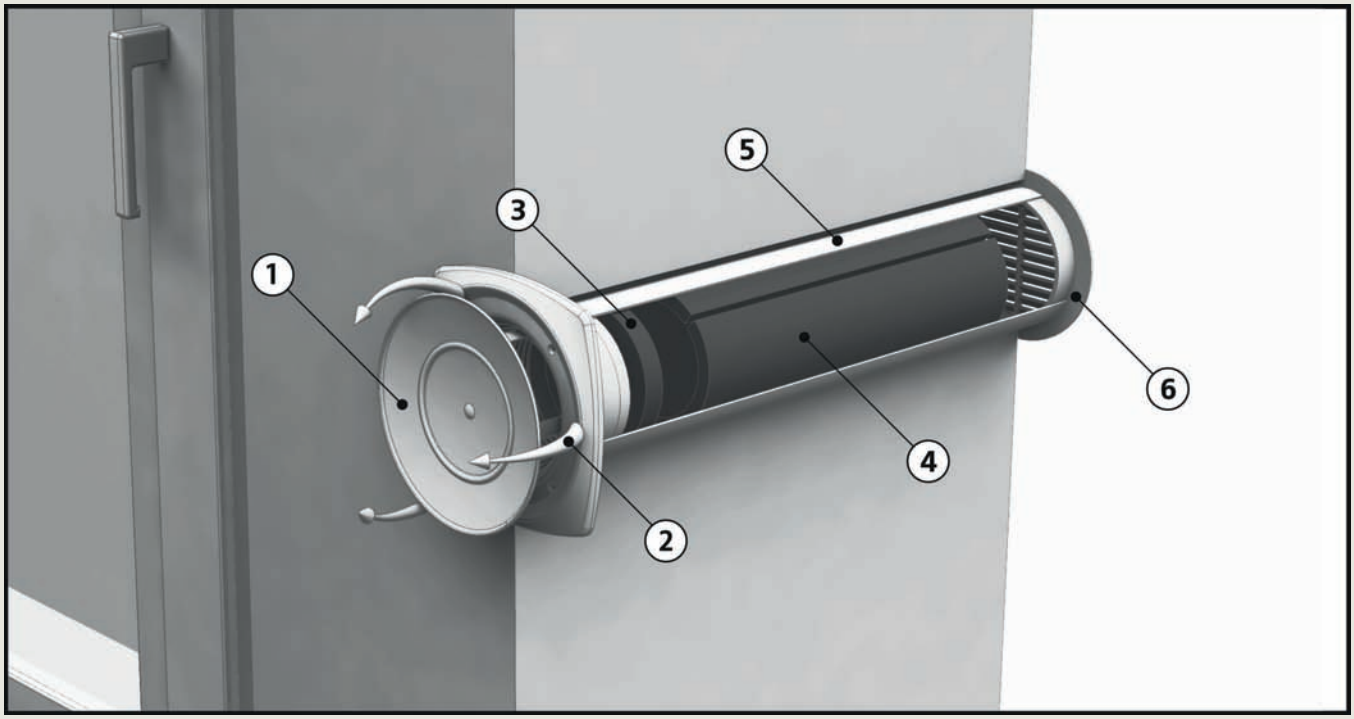

1. Декоративен панел, монтиращ се в помещението;
2. Въздушен поток;
3. Филтър;
4. Изолация;
5. Пластмасов въздуховод;
6. Външна решетка (външен дофузер).

Варианти за нагнетателни и смукателни конусни вентили

(серия «STREET LINE»)

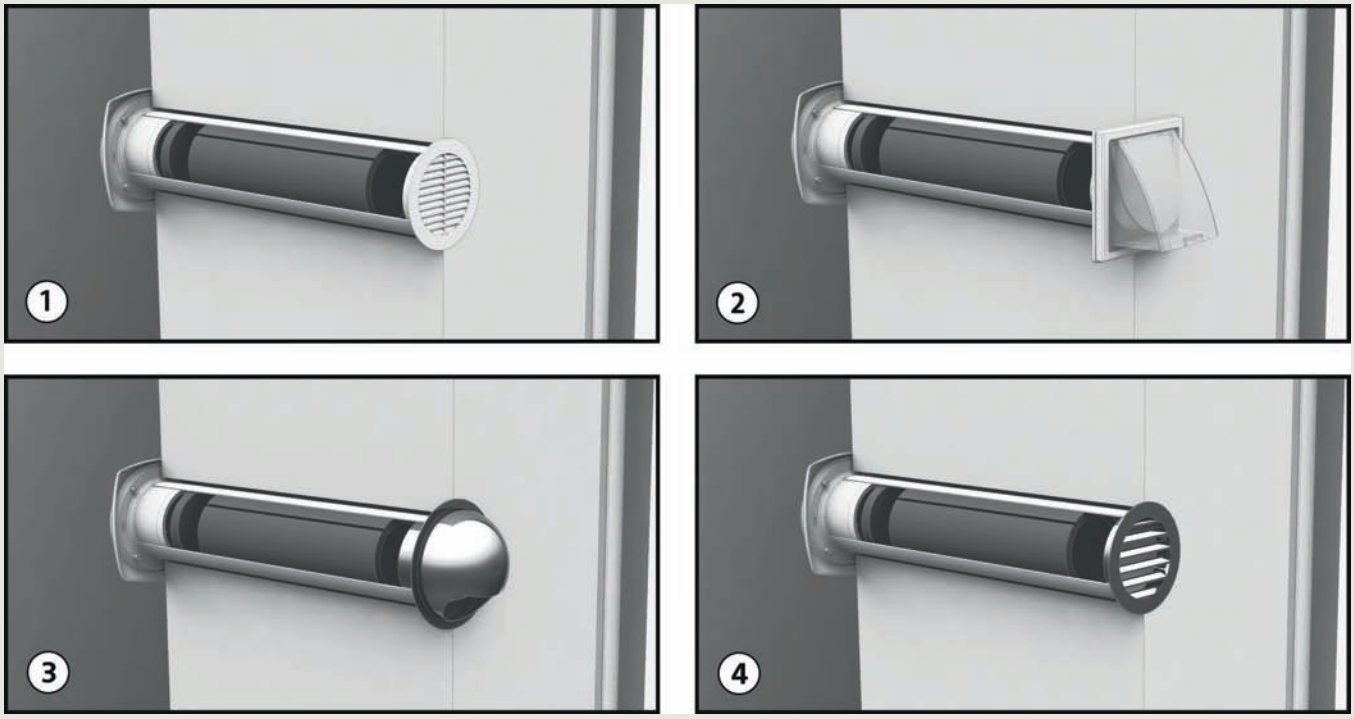

1. КР – външна решетка (ASA-пластмаса) + механизъм за контрол на дебита;
2. КР-02 - външна нагнетателна решетка (ASA-пластмаса) + механизъм за контрол на дебита
3. КР-03 - външна нагнетателна решетка (стоманена) + механизъм за контрол на дебита;
4. КР – външна решетка (алуминиева) + механизъм за контрол на дебита.

Типичен пример за изграждане на вентилационна с-ма

WC помещение

(пример за монтаж на осов вентилатор PROFIT)

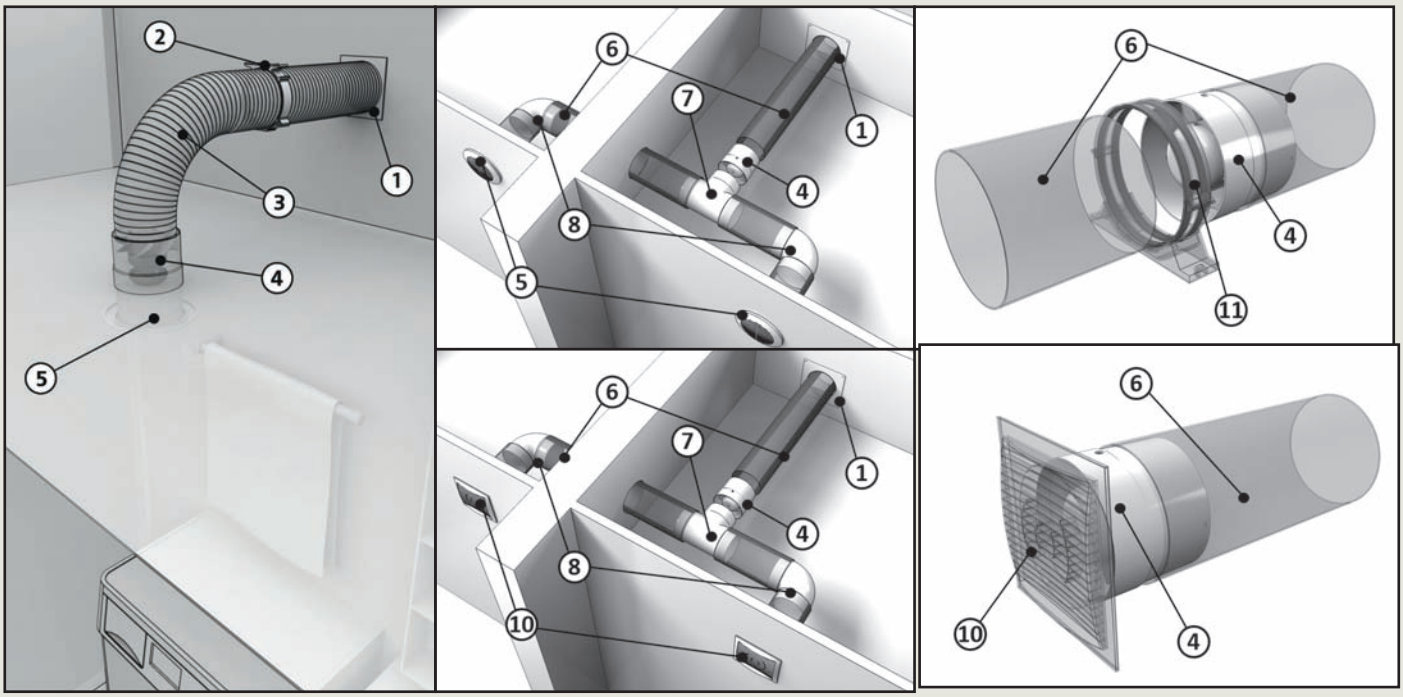

1. Планка за кръгъл въздуховод (NKP);
2. Скоба (DKP);
3. Блиндиран гъвкав въздуховод (VA);
4. Осов вентилатор (PROFIT);
5. Нагнетателна решетка (RKF);
6. Кръгъл въздуховод (VP);
7. Т-връзка (TP);
8. Коляно (KKP);
9. Нагнетателна решетка (RPKF);
10. Нагнетателна решетка (RCF);
11. Конектор за кръгли въздуховоди (DSKP).

Кухня

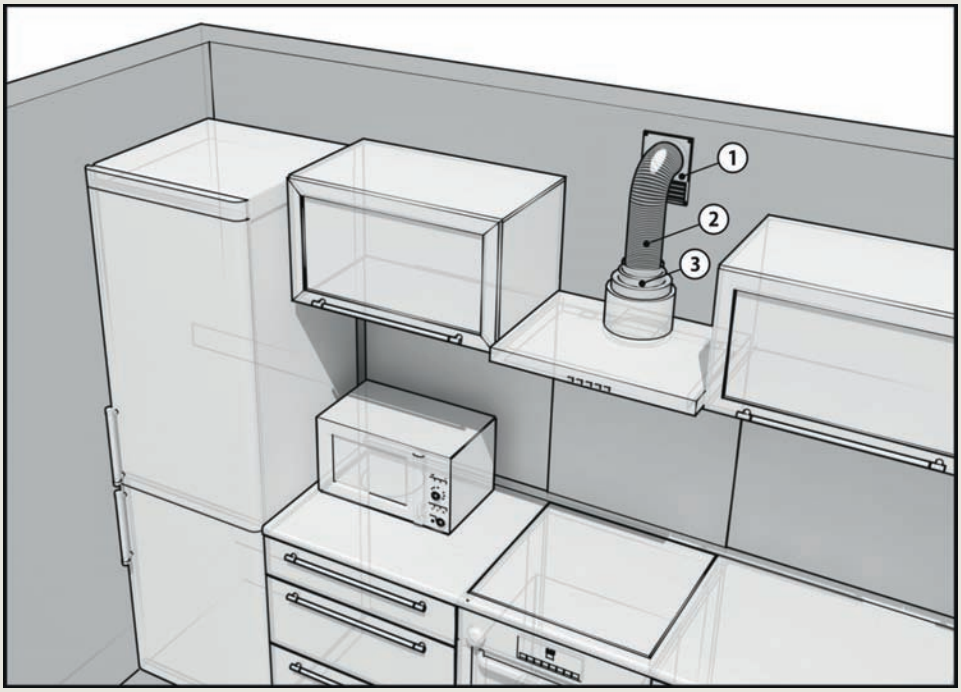

1. Нагнетателна решетка с въздуховод (RU);
2. Гъвкав алуминиев въздуховод (VA);
3. Конектор за кръгли въздуховоди (PU).

Типичен пример за вентилационна с-ма

Кухня

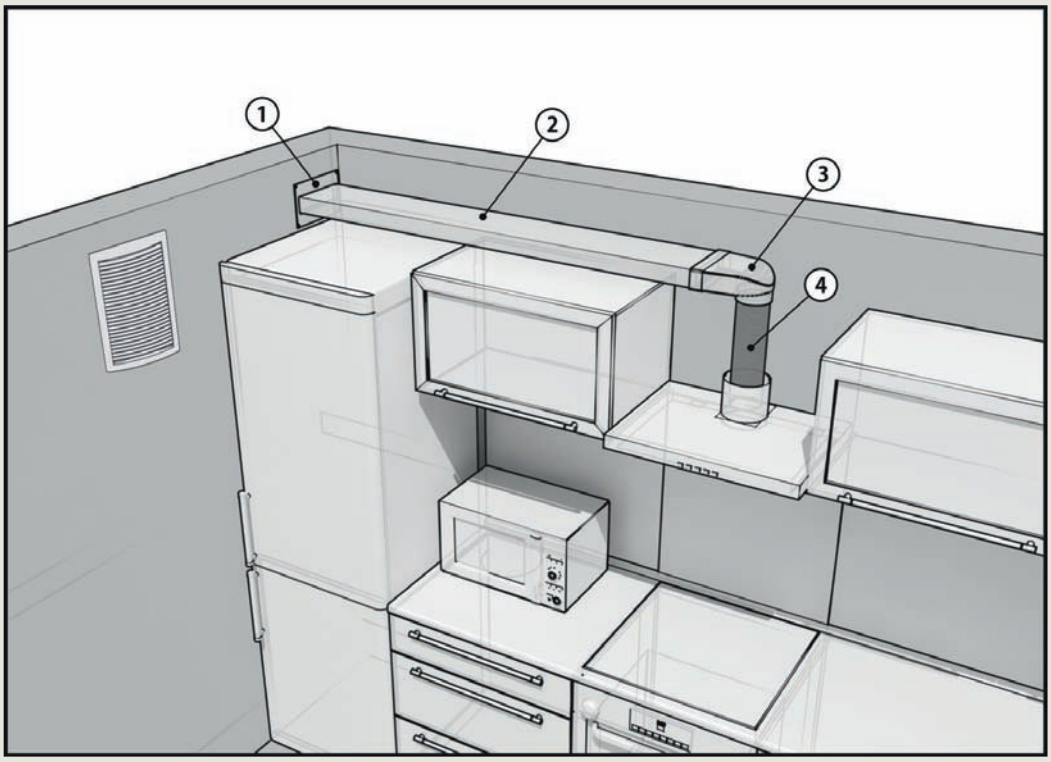

1. Подложка за правоъгълни въздуховоди (NPP);
2. Правоъгълен въздуховод (VP);
3. Конектор за плосък въздуховод с дифузер (SKFP);
4. Алуминиев гъвкав въздуховод (VA).

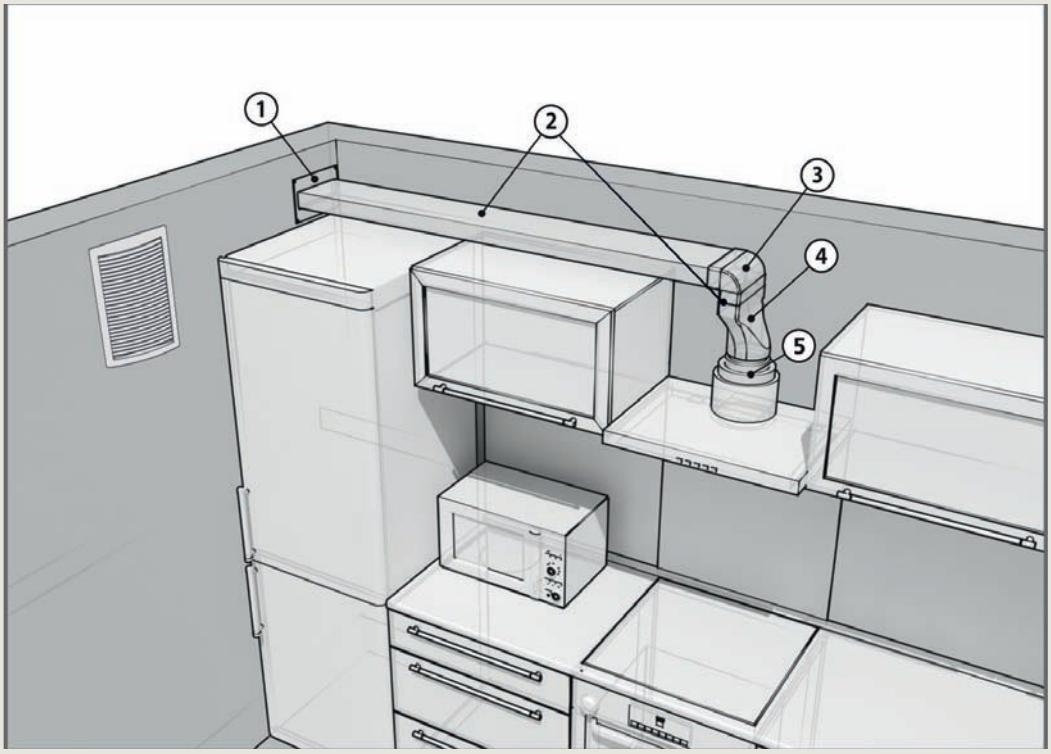

1. Подложка за правоъгълни въздуховоди (NPP);
2. Правоъгълен въздуховод (VP);
3. Правоъгълно коляно (KVP);
4. Плоско-кръгъл адаптор (SPKP);
5. Редукция (PU).

Типичен пример за изграждане на вентилационна с-ма

WC помещение

(вентилатор, решетка за врата)

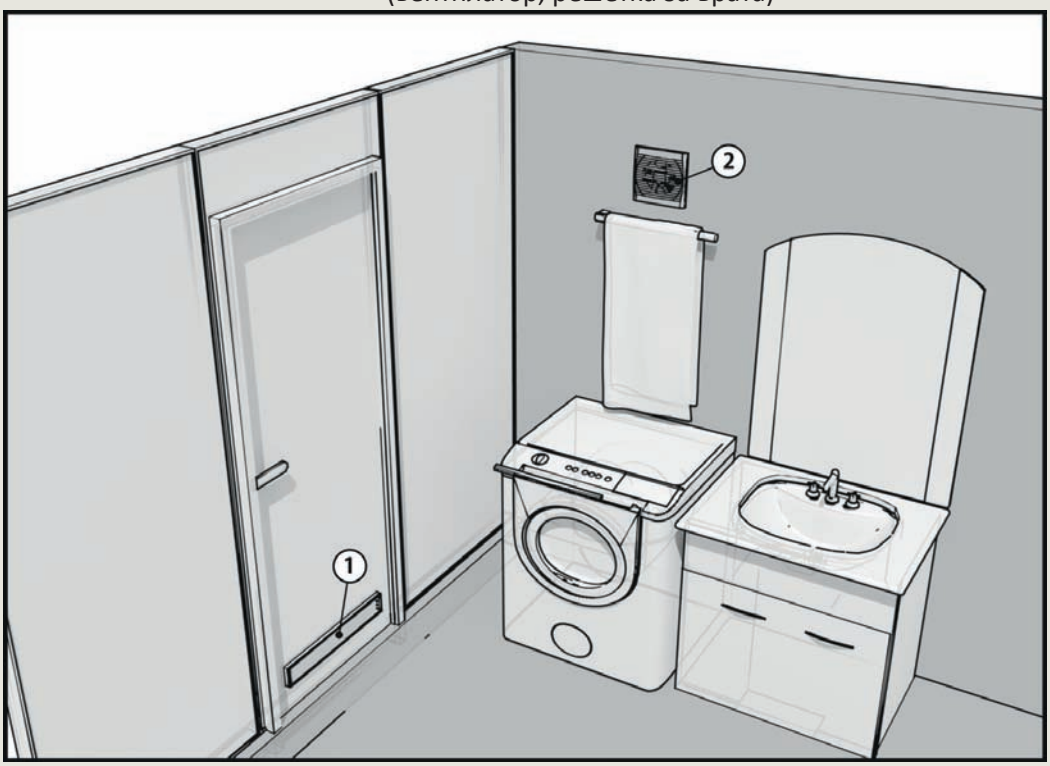

1. Решетка за врата (DP);
2. Вентилатор.

WC помещение

(конусен вентил, окачен таван)

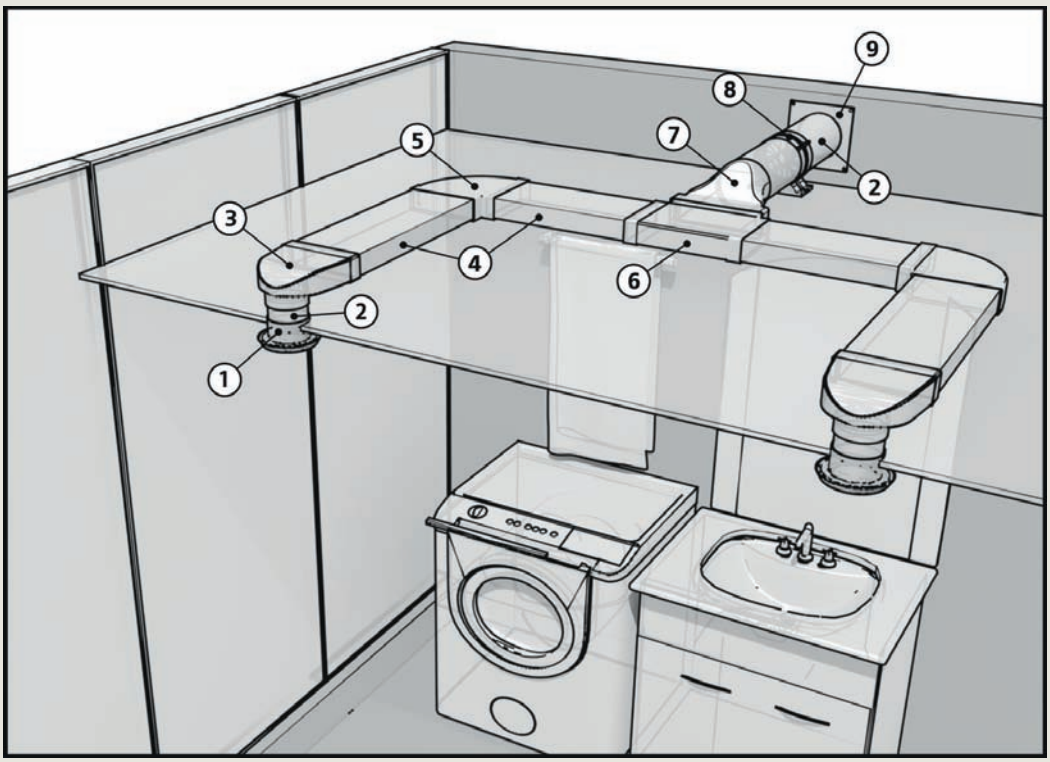

1. Нагнетателен конусен вентил (AVP);
2. Кръгъл въздуховод (VP);
3. Плосък конектор с фланец за дифузер (SKFP);
4. Плосък въздуховод (VP);
5. Хоризонтално коляно (KGP);
6. Плоска Т-връзка (TTP);
7. Плоско-кръгъл адаптор (CPKP);
8. Вентилатор (PRO);
9. Подложка за кръгъл въздуховод (NKP)

Типичен пример за вентилационна с-ма

WC помещение

(WC отделно помещение, два вентилационни извода)

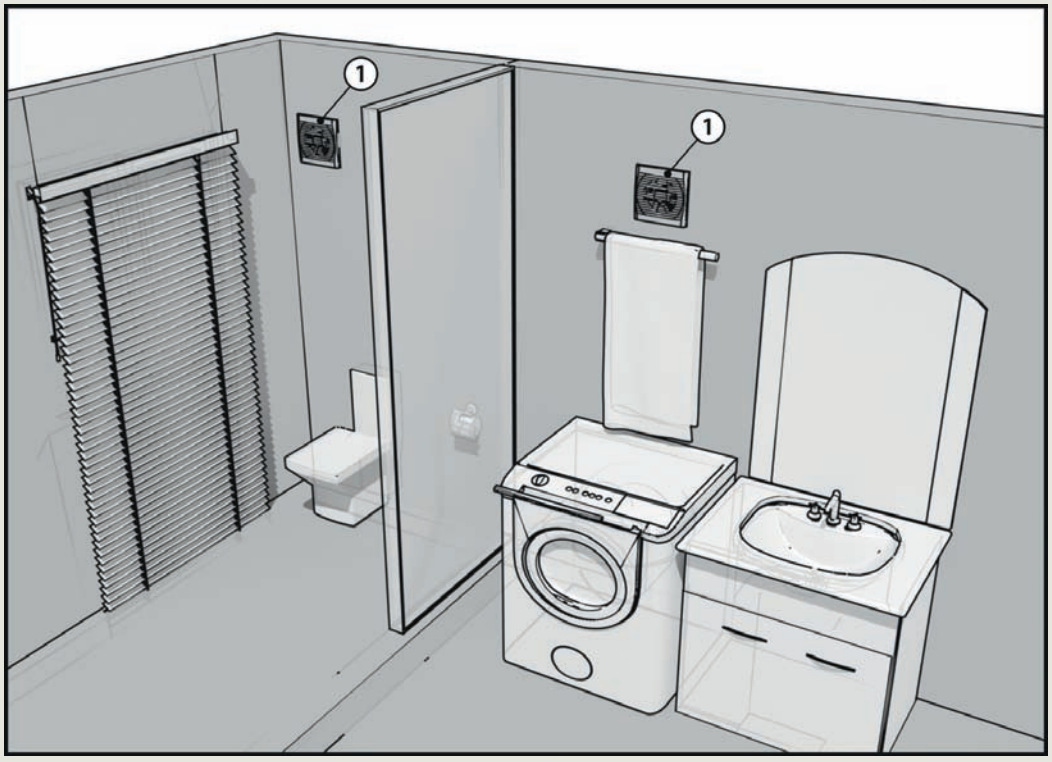

1.Вентилатор

WC помещение

(WC едно помещение, два вентилационни извода)

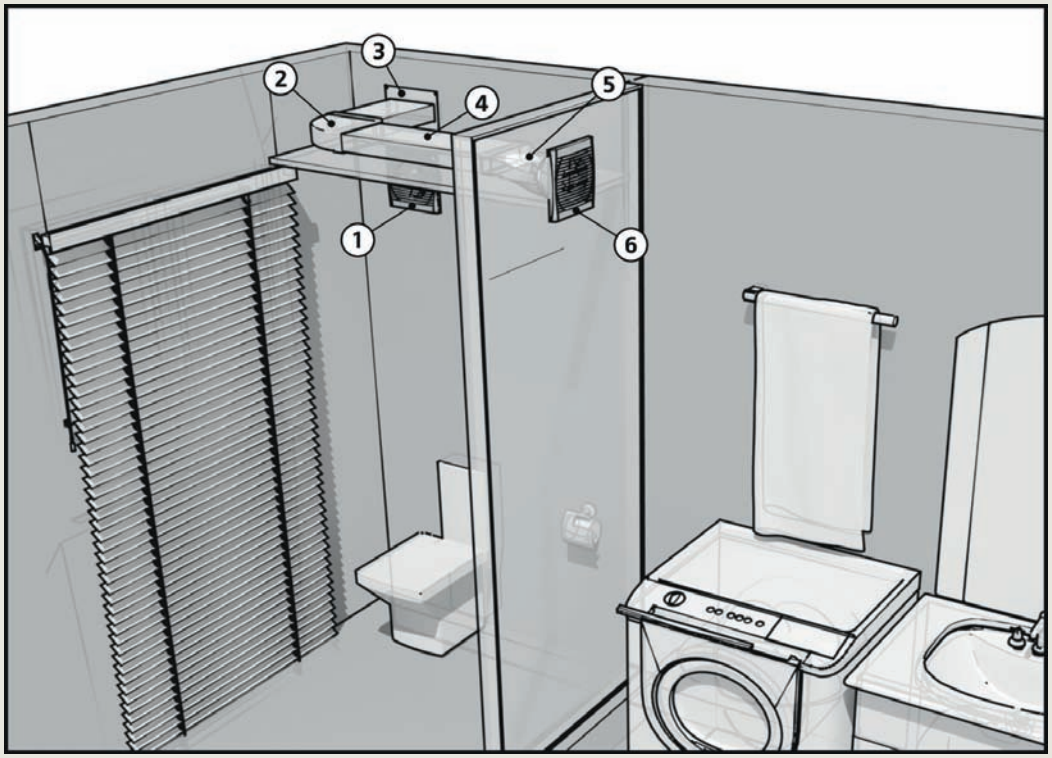

1. Вентилатор
2. Хоризонтално коляно (KGP);
3. Подложка за плосък въздуховод (NNP);
4. Плосък въздуховод (VP);
5. Плоско-кръгъл конектор (SPKP);
6. Вентилатор.

Типичен пример за изграждане на вентилационна с-ма

Офис

(конусен вентил, окачен таван)

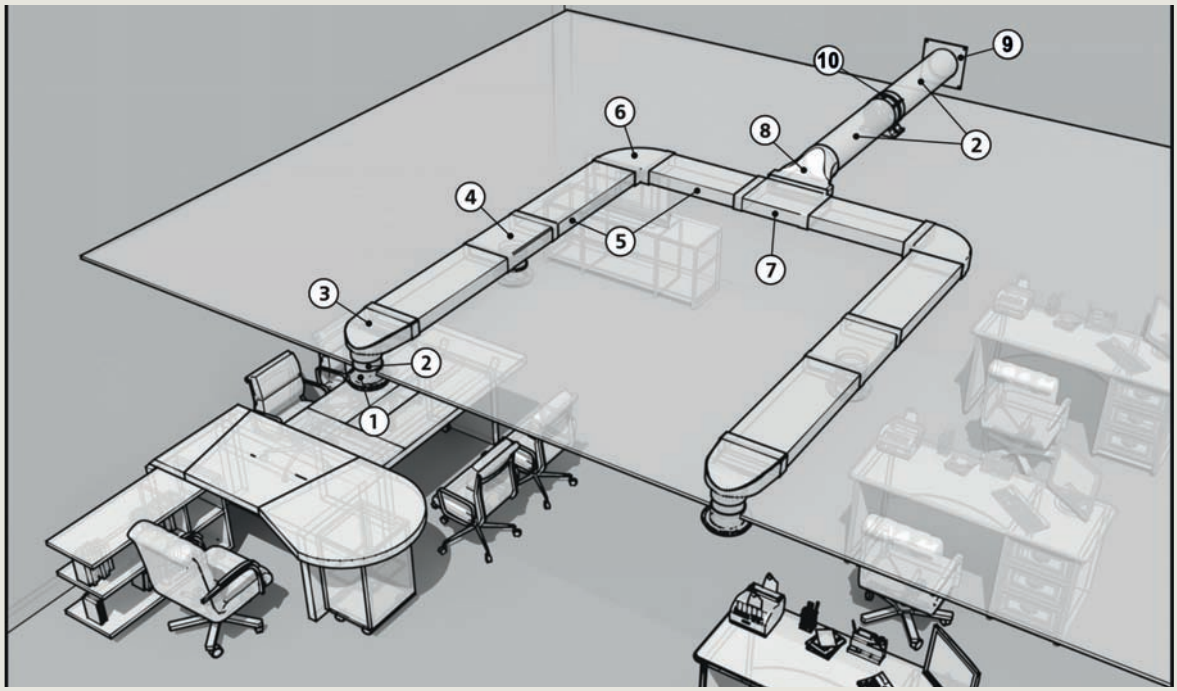

1. Нагнетателен конусен вентил (AVP);
2. Кръгъл въздуховод(VP);
3. Плосък адаптор с фланец за дифузер (SKFP);
4. Плосък конектор с фланец за дифузер (TFP);
5. Плосък въздуховод (VP);
6. Хоризонтално коляно (KGP);
7. Плоска Т-връзка (TPP);
8. Плоско-кръгъл адаптор (SPKP);
9. Подложка за кръгъл въздуховод (NKP);
10. Вентилатор (PRO).

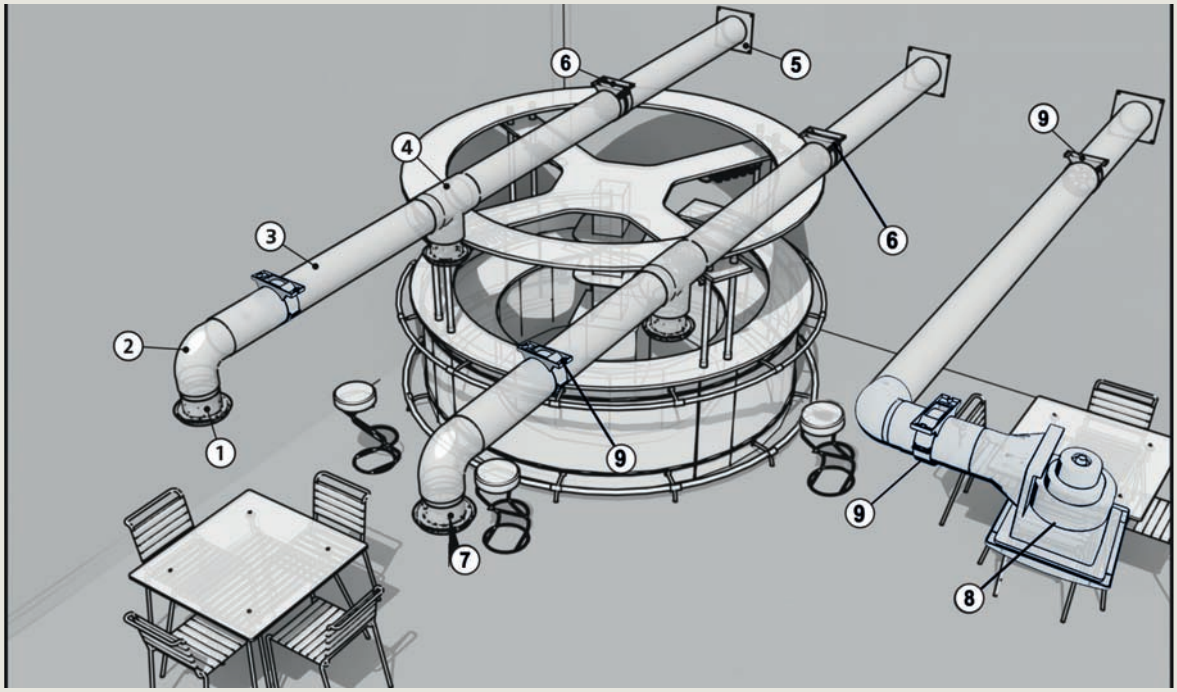

1. Нагнетателен конусен вентил (AVP);
2. Кръгло коляно (KKP);
3. Кръгъл въздуховод (VP);
4. Кръгло съединение (TP);
5. Подложка за кръгли въздуховоди (NKP)
6. Вентилатор (PRO);
7. Нагнетателен конусен вентил (APP);
8. Центробежен вентилатор (NVF);
9. Държач (DSKP)

ERA

Reliable supplier

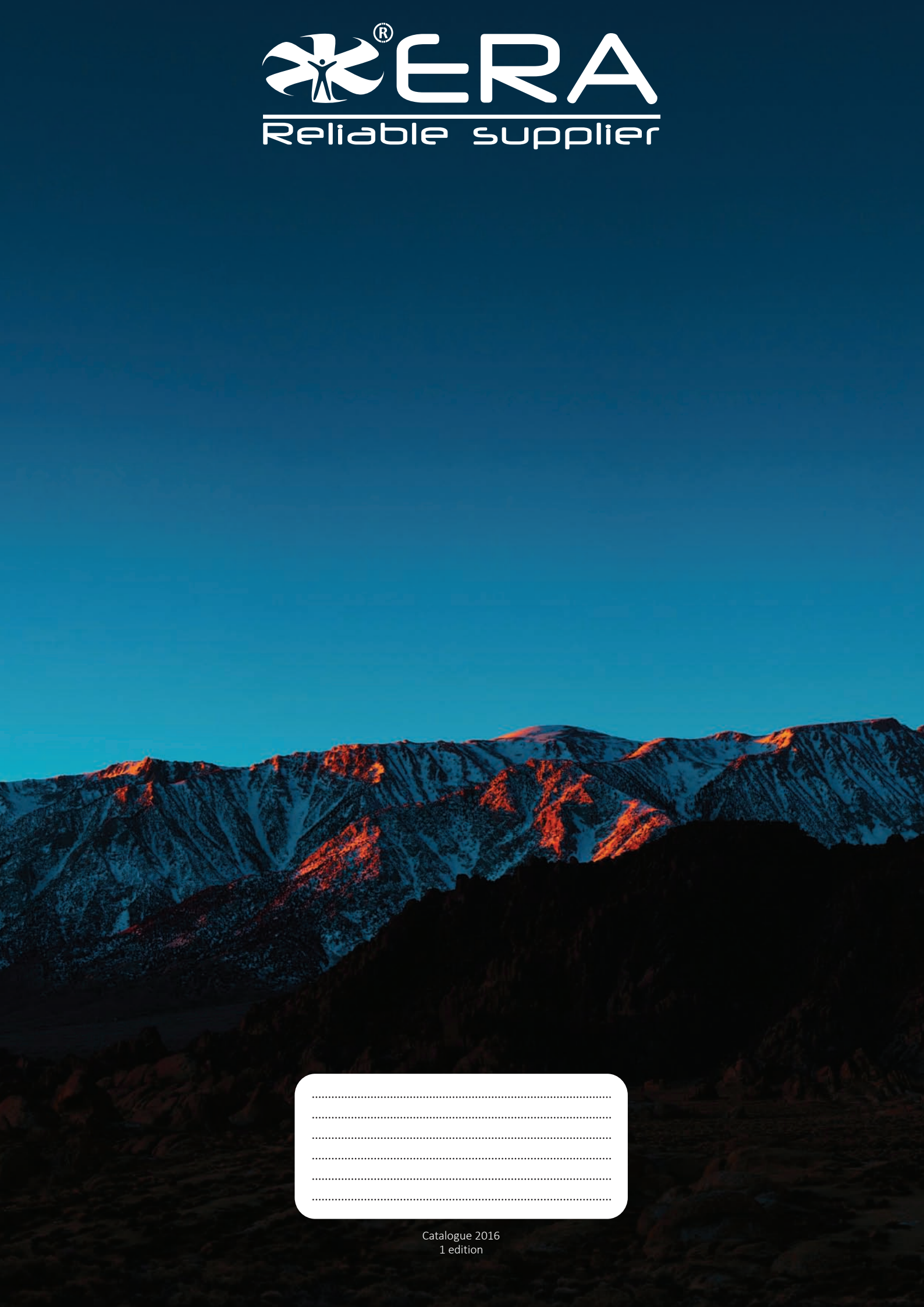

Catalogue 2016
1 edition