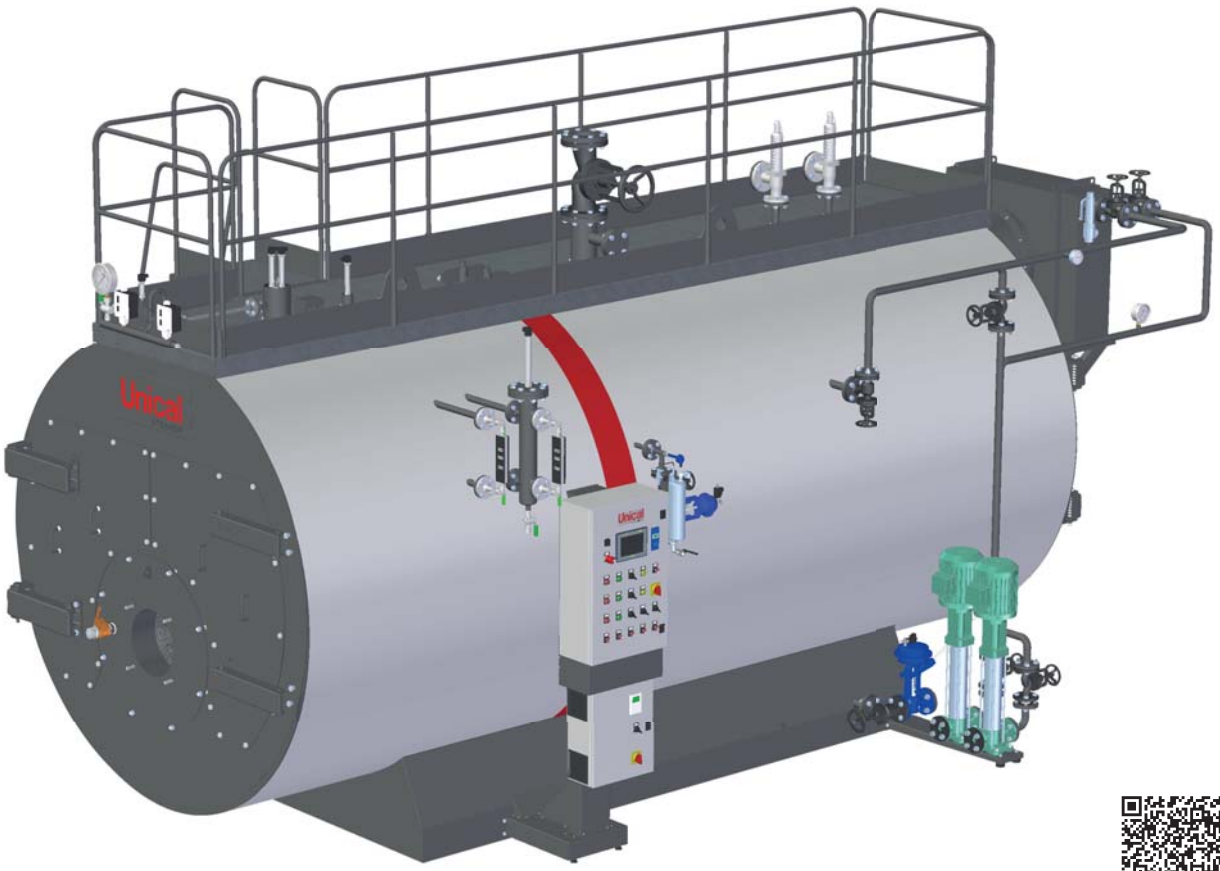

HIGH PRESSURE PACKAGED STEAM BOILER, GENUINE THREE-PASS FIRE TUBE										
RANGE	from 886 kW (1300 kg/h) to 14721 kW (21600 kg/h)									
FUEL	gas, light & heavy oil									
DESIGN PRESSURE	12 bar (higher pressure on request)									
DESIGN TEMPERATURE	191.7°C (12 bar)									
MODELS STD VERSION	2000	3200	4700	6300	7900	9400	12500	15700	18000	21600
MODELS Low NO_x VERSION	1700	2500	3750	5000	6250	7500	10000	12500	14400	17250
MODELS Low NO_x E VERSION	1300	2000	3000	4000	5000	6000	8000	10000	12000	15000

DESCRIPTION

High pressure packaged steam boiler, genuine three-pass fire tube, horizontal, 90% efficiency (1).

TRYPASS is a family of packaged smoke tube steam boilers, genuine three-pass, and wet back. Standard safety pressure up to 12 bar (higher pressure available on request) and output from 1300 to 22000 kg/h. With a large steam chamber and large evaporator for an high steam quality. It can be operated with liquid or gaseous fuels. Every model is complete with regulations and safety accessories for automatic operation and easy commissioning.
In compliance to the current laws, each steam boiler undergoes a conformity assessment, carried out by a Notified Body. The conformance to the essential safety requirements demanded by the European Pressure Equipment Directive 97/23/CE (PED) is guaranteed by the CE mark.

Design features:

By means of the three-pass design the smoke gases in the combustion chamber are diverted to the front through the first set of fire tubes by the reversing chamber; then reversed again by the frontal smoke box to the second smoke tube sections and discharged through the chimney connection. The appliance is designed to ensure low heating loads in the combustion chamber, low superficial loads and low NOx emissions (with Low NOx burners).

- **Boiler body:** is made of a cylindrical shell and a wet back furnace, dished and butt welded tube plates, made of high quality steel. All the materials have certificates attesting their chemical and mechanical characteristics, the controls are carried out during each production stage, and, theirs suitability for use as well. The welding seams are carried out by qualified personnel in compliance to certified procedures and are subjected to Non Destructive Tests, in accordance to an internal "Manufacturing and Control" program. Once the boilers have been manufactured they are subjected to hydraulic testing in accordance to the requirement 7.4 – Annex I, laid down in the Directive 97/23/CE (PED).
- **Smoke tubes:** made of high quality steel, are welded to tube plates, and are without helical turbulators.
- **Reversing chamber:** is built in welded steel plate, completely water-cooled, and connected to the rear smoke-box with supports and manhole.
- **Front smoke-box:** is built in welded steel plate, completely cladded internally with a layer of insulation material and with a layer of high density refractory material. Two doors for cleaning and inspection are fitted with hinges to be quickly opened. Close to the burner hole is present a self-cleaning sight glass for combustion control during boiler operation.
- **Rear smoke-box:** is built in welded steel plate, completely cladded internally with a layer of insulation material and with a layer of high density refractory material. Two doors for cleaning and inspection are fitted with hinges to be quickly opened. Complete with an horizontal chimney connection with a diameter sized to the boiler's output, and a self-cleaning sight glass for combustion control. The rear smoke-box can be accessorized with and external economizer.
- **The base:** is built with a steel frame, welded to the tube plates and closed with steel plates.
- **Walkway:** positioned on the top part of the boiler, is made of steel, covered with chequered plate and completed; on request with handrail and access ladder.
- **Insulation:** the shell is thermally insulated with a 100 mm rock wool cladding binded with high density, thick thermosetting resins, suitably supported and covered externally in 10/10 thick enamelled aluminum.

Standard equipment: (2)

- Steam main globe valve.
- n. 2 spring loaded safety valves.
- n. 2 reflecting level indicators, with flanged connections, purging and cut-off cocks.
- n. 1 large manometer with 3 way cock for manometer calibration.
- n. 1 safety pressure switch with manual reset onto the board panel, CE PED certified.
- n. 1 limit working pressure switch.
- n. 1 regulation pressure switch for two stages burners or probe for modulating burners.
- n. 2 safety minimum level switches, with auto-diagnosis and manual reset on the board panel, CE certified.
- n. 2 water level probes for ON-OFF pump regulation.
- Feeding group complete with 2 vertical multistage centrifugal pumps.
- Valve assembly for feeding circuit, with relevant pipes already fitted.
- Automatic group for level control.
- n. 1 manual bottom blowdown valve.
- Man-hole on top and hand-hole on water side.
- Integral steam drier for high steam quality.
- Blind burner plate.
- Lifting lugs.
- Control board panel IP55 400V - 3+N - 50Hz
- Document folder enclosing:
  - Manufacturer's Declaration of Conformity in compliance with the Annex VII of the European Directive 97/23/EC (PED)
  - Installation, operation and service manuals.
  - Certificates of safety components.
  - Control board's electric schemes and related Declaration of Conformity.
  - Water characteristics: requirements concerning the quality of water supply, the water in the boiler, frequency and type of sample tests to do.

Options:

- Kit of a "Second boiler water feeding pump"
- Kit of "maximum safety level"
- Kit TDS (Total Dissolved Salts)
- Kit of "Automatic de-sludging" (Blow down)
- Kit "72 hr" Supplied with electronic board panel Unical, model IML (Industrial Multi Logic)
- External Kit economizer and modulating boiler water feeding group
- Pre-drilled burner plate according to request
- Oil or Gas fired burner
- Ladder and walkway

Special versions for all models

TRYPASS' 24 hr / 72 hr

- equipped with "IML board panel" to obtain the certification for operation "without continuous surveillance" up to a maximum of 24 hr.
- equipped with "IML board panel" and "Kit 72 hr" to obtain the certification for operation "without continuous surveillance" up to a maximum of 72 hr.

(1) This value is intended without economizer and may change according working pressure and load conditions.
(2) The quantity and the model may vary according to the configuration.

MAIN COMPONENTS

1. Boiler body
2. Front doors
3. Rear doors
4. Board panel
5. Instruments assembly
6. Level safety sensors
7. Capacitive level transmitter (IML)
8. Steam valve
9. Safety valves
10. Drain
11. Pump feeding group
12. TDS connection
13. Level gauge

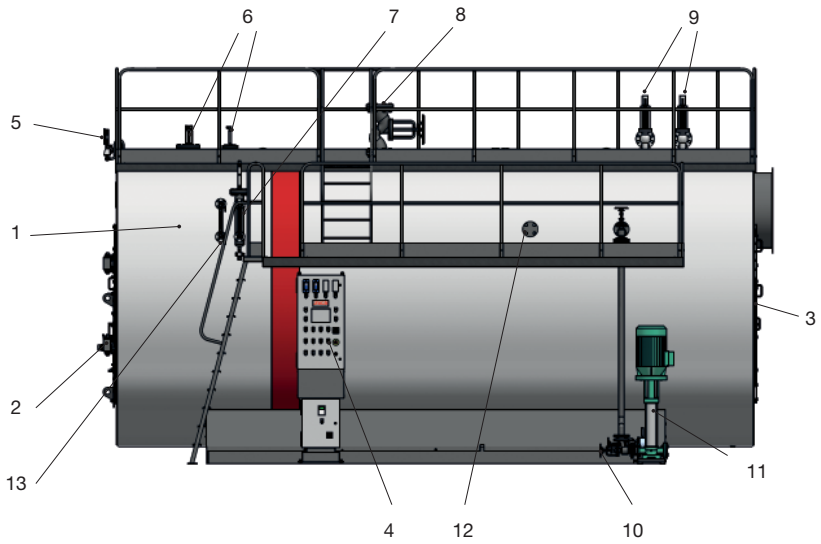

TECHNICAL DATA

Model	Steam production	Nominal output*	Nominal input	Δp smoke side	Max. working pressure**	Water content at level	Total volume	Exchange surface	Burner head min. length
	kg/h	*kW*	*kW*	*mbar*	*bar*	*lt*	*lt*		*mm*
1300 Low NOx E	1300	886	996	4,5	12	4620	5350	55	450
1700 Low NOx	1700	1159	1317	7	12	4620	5350	55	450
2000 STD	2000	1363	1558	13	12	4620	5350	55	450
2000 Low NOx E	2000	1363	1531	5,5	12	6060	7360	55	450
2500 Low NOx	2500	1704	1936	8	12	6060	7360	55	450
3200 STD	3200	2181	2493	13	12	6060	7360	55	450
3000 Low NOx E	3000	2045	2285	6	12	7810	9195	84	500
3750 Low NOx	3750	2534	2847	10	12	7810	9195	84	500
4700 STD	4700	3176	3589	15	12	7810	9195	84	500
4000 Low NOx E	4000	2726	3080	6	12	9890	12215	117	500
5000 Low NOx	5000	3408	3873	9	12	9890	12215	117	500
6300 STD	6300	4393	4934	15	12	9890	12215	117	500
5000 Low NOx E	5000	3408	3808	7,5	12	11700	14550	140	500
6250 Low NOx	6250	4259	4785	11,5	12	11700	14550	140	500
7900 STD	7900	5384	6118	18	12	11700	14550	140	500
6000 Low NOx E	6000	4089	4569	9	12	12800	15900	160	550
7500 Low NOx	7500	5111	5743	15	12	12800	15900	160	550
9400 STD	9400	6406	7238	22	12	12800	15900	160	550
8000 Low NOx E	8000	5452	6058	11	12	16500	20100	228	550
10000 Low NOx	10000	6815	7572	16	12	16500	20100	228	550
12500 STD	12500	8519	9572	24	12	16500	20100	228	550
10000 Low NOx E	10000	6815	7572	13	12	20170	25150	265	600
12500 Low NOx	12500	8519	9466	20	12	20170	25150	265	600
15700 STD	15700	10700	11955	32	12	20170	25150	265	600
12000 Low NOx E	12000	8178	9087	16	12	22400	28800	306	600
14400 Low NOx	14400	9814	10904	23	12	22400	28800	306	600
18000 STD	18000	12267	13706	35	12	22400	28800	306	600
15000 Low NOx E	15000	10223	11359	21	12	25800	33300	360	700
17250 Low NOx	17250	11756	13435	27	12	25800	33300	360	700
21600 STD	21600	14721	16448	28	12	25800	33300	360	700

*with feeding water temperature = 80°C and pressure = 12 bar **safety valves setting value

PRODUCT PLUS VALUES



Fast coupling connections

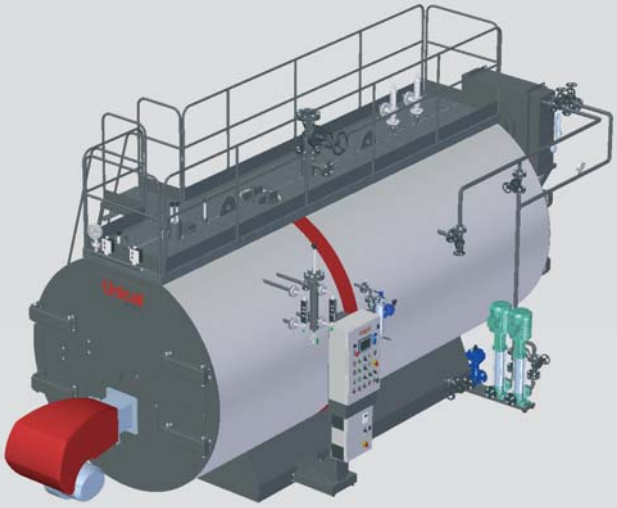



IML Board panel (optional)

- **EXCELLENT EFFICIENCY**
  thanks to the three real smoke passes
- **LOW NO_x EMISSIONS**
  Thanks to the reduction of the specific thermal load according to the different versions
- **EFFICIENT THERMAL INSULATION**
  given by:
  - high total thickness, made by joining two rock wool layers with aluminium foil
  - insulation between the casing and the hot parts of the boiler body for thermal bridges elimination
- **CLEANING DOORS**
  front and rear doors for inspection and cleaning of the tubes
- **LADDER AND PLATFORM**
- **SIMPLIFIED ELECTRICAL CONNECTION**
  via fast coupling connectors
- **BOARD PANEL**
  electromechanical and electronic, expandable with options
- **POSSIBLE COMBINATION**
  with one, two, three stage or modulating burners
- **IMPLEMENTABLE FUNCTIONS**:
  boiler and board panel designed for the integration of optional kits, also with boiler already installed.

DIMENSIONS

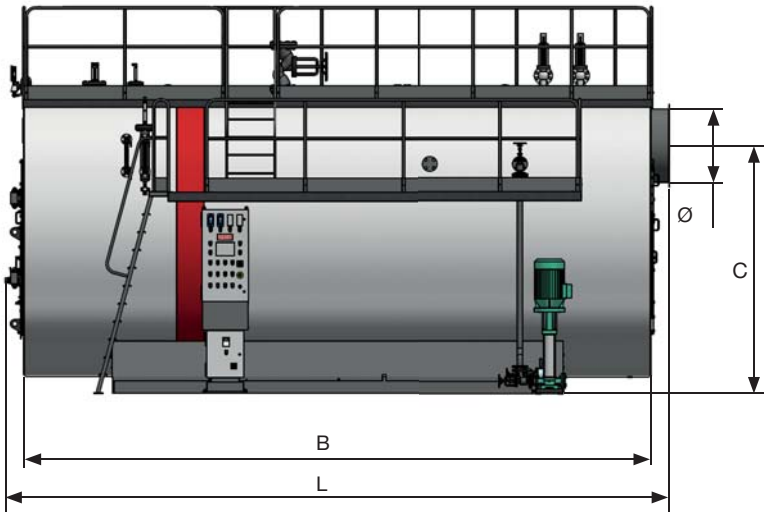

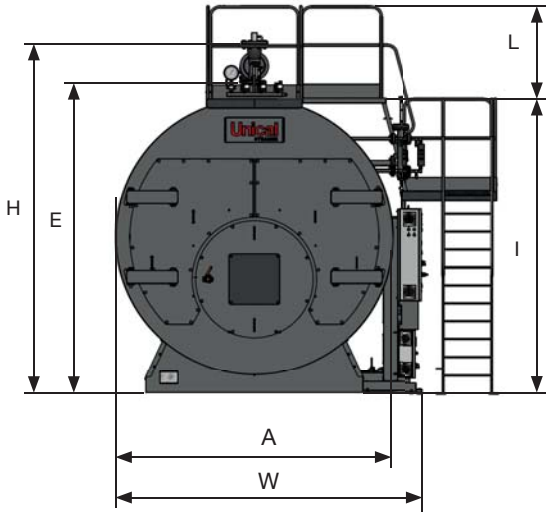

Model	W	L	H	A	B	E	I	L	ø	Empty Weight
	mm	*mm*	*mm*	*mm*	*mm*	*mm*	*mm*	*mm*	*mm*	*kg*
1300 Low NOx E / 1700 Low NOx / 2000 STD	2310	4360	2785	1950	1925	2470	2230	1000	408	9000
2000 Low NOx E / 2500 Low NOx / 3200 STD	2460	4910	2935	2100	2075	2620	2380	1000	408	10500
3000 Low NOx E / 3750 Low NOx / 4700 STD	2610	5410	3130	2250	2110	2775	2530	1000	508	12000
4000 Low NOx E / 5000 Low NOx / 6300 STD	2810	5760	3375	2450	2280	2975	2730	1000	558	13500
5000 Low NOx E / 6250 Low NOx / 7900 STD	2960	6010	3610	2600	2475	3120	2880	1000	608	16500
6000 Low NOx E / 7500 Low NOx / 9400 STD	3040	6210	3685	2680	2530	3200	2960	1000	658	19500
8000 Low NOx E / 10000 Low NOx / 12500 STD	3210	7010	3810	2850	2560	3325	3080	1000	708	22500
10000 Low NOx E / 12500 Low NOx / 15700 STD	3360	7410	3855	3000	2640	3370	3200	1000	808	25500
12000 Low NOx E / 14400 Low NOx / 18000 STD	3560	7610	4070	3200	2750	3470	3350	1000	858	28500
15000 Low NOx E / 17250 Low NOx / 21600 STD	3810	7810	4300	3450	2960	3700	3580	1000	908	32000

MAIN FUNCTIONS OF THE BOARD PANEL

BASIC

- One and two stage burner regulation
- ON / OFF level regulation
- N. 2 safety level switches on low level
- N. 1 PED safety level switch on low level
- Terminal strip on fast coupling connectors
- Expandability through optional kits
- Electrical protection degree IP 55



IMC

- One and two stage burner regulation
- ON / OFF level regulation
- N. 2 PED safety level switches on low level
- Terminal strip on fast coupling connectors
- Expandability through optional kits
- Electrical protection degree IP 55



IML

- Regulation PLC
- Touch screen 7” display with graphic interface
- One, two, three stage or modulating burner
- ON / OFF or modulating level regulation with valve or with inverter
- N. 2 PED safety level switches on low level
- Terminal strip on fast coupling connectors
- Expandability through optional kits
- Electrical protection degree IP 55



BASIC BOARD PANEL

Regualtion simplicity

The boiler regulation is committed to a board panel with electromechanical components that allows to obtain numerous advantages, among which:

- Simple use;
- Kit fitting:
  - high level
  - management of a second water feeding pump

Installation

The board panel is supplied with fast multi-pole connections that simplify the installation on to the boiler.

Safety

- The board panel allows the automatic regulation of the steam boiler;
- On the board panel are fitted the components that allow, if necessary, the manual operation of the steam boiler.



IMC (Industrial Multi Cabling) BOARD PANEL

Simplicity and functionality

The boiler regulation is committed to a board panel with electromechanical components that allows to obtain numerous advantages, among which:

- simple use;
- complete control of all the requested functionalities;
- mounting of numerous optional kits.

The “IMC” system is made with components that allow a modular management. The harness is so designed that the system can operate in many configurations.

Installation

The board panel is supplied with fast multi-pole connections that simplify the installation on to the boiler.

Safety

- The board panel allows the automatic regulation of the steam boiler.
- It is configurated for the alarms signalling; the management of the boiler safety devices is designed according to the rules in force.
- On the board panel are fitted the components that allow, if necessary, the manual operation of the steam boiler.



IML (Industrial Multi Logic) BOARD PANEL



Simplicity and functionality

The boiler regulation is committed to a board panel with electromechanical components that allows to obtain numerous advantages, among which:

- operation with multiple logic;
- simple use;
- efficient regulation;
- complete control of all the requested functionalities;
- approval for 24/72 hr operation w/o continuous surveillance.

The “IML” system is made with components that allow a modular management. The harness is so designed that the system can operate in many configurations.
The main aesthetic novelty is the matching of the signalling bulbs for the operation and safety, with a touch-screen display and the synoptic representation of the boiler.

The use of a programmable electronic device through PLC, allows to attain a high complexity in the boiler operation logic, guaranteeing a more intelligent and complete management.

The electronic unit is endowed of several inputs and outputs that can control, at the same time, several boiler functions and in a more articulated manner, if compared with an electromechanical board panel.

The board panel manages completely all the operational and safety parameters during the operation periods, without continuous surveillance up to a maximum of 72 hrs.

User interface with touch-screen display

The use of a graphic display allows to show, on the main page of the menu, the steam boiler in operation with the scheme of the main control devices. The touch-screen display allows to use virtual direct access keys to the setting and regulation pages. So, the graphic representation through symbols, results intuitive and of easy use.

Hardware and system expandability

The basic system is composed of:

- central unit (CPU)
- user interface (display)
- module of additional inlets

The display is the user interface and acts both, as an output device (visualization and signalling) and an input (commands entering).

The central unit is prearranged for the connection to additional expansion units.

The expansion allows:

- to perform boiler cascade systems (with master-slave logic);
- to connect the steam boiler to a supervision system (SCADA);
- to connect the control via GSM for the remotation of alarm signals;
- to control other devices present in the system (with more additional modules);
- to update the software per “upgrading” or modifications to the system.

Modulation

The IML board panel allows the management of the modulating burner without the need of the burner modulating kit; furthermore, it allows the level modulation through the signal coming from the capacitive sensor factory fitted.

Service

The IML board panel allows the function of the “guided service” (SAFE SERVICE) for performing the routine controls by the person authorised to the operation, at the expiring of the without surveillance operation period. The controls results are stored in an internal database, transferable on an archives through USB port on the L.H. side panel.

Installation

The board panel is supplied with fast multi-pole connections, that make easy the installation on to the steam boiler.

Safety

- The electronic regulator replaces only the regulation components;
- The board panel is set for the alarm signalling on the display; the management of the boiler safety devices remains of electromechanical type.
- On to the board panel are also fitted the components that allow, if necessary, the manual operation of the steam boiler.

BOARD PANEL COMPARISON TABLE

DESCRIPTION FUNCTIONS			BASIC	IMC	IML
Elettromechanical components for regulation and safeties			•	•	•
Regulation with PLC			-	-	•
Graphical user interface with 7" touch screen display			-	-	•
Fast connection terminal			•	•	•
Electrical prearrangement for kits mounting			-	•	•
Forced and thermostat controlled cooling system			-	•	•
Differentiated management of the boiler with economiser installed			-	-	•
First controlled water filling mode			-	-	•
Boiler starting mode from cold			-	-	•
Burner	Pressure transducer		-	-	•
	Pressure continuous visualization		-	-	•
	One stage		•	•	•
	Two stage		•	•	•
	Three stage		o	o	•
	Modulating (3 points)		- (1)	- (1)	•
	Modulating (analogic+feed back signal)		- (1)	- (1)	•
Level	Capacity sensor level transducer		-	o	•
	Continuous visualization of water level		-	-	•
	Pump manual operation function		•	•	•
	Water feeding pump ON/OFF regulation		•	•	•
	Modulating regulation with solenoid valve (3 points)	KIT MODUL V	-	o	•
	Modulating regulation with pneumatic valve (analogic+feed back signal)	KIT MODUL V	-	o	•
	Two stage regulation with inverter	KIT INVERTER	-	-	o
	Modulating regulation with inverter	KIT INVERTER	-	-	o
	Second water feeding pump control	Kit 2nd POMPA	o	o	o
	Automatic changeover between 1st & 2nd pump for load & consumption sharing	Kit 2nd POMPA	-	-	o
	Pump 2 manual operation function	Kit 2nd POMPA	o	o	o
	1st safety low water level control, PED approved		•	•	•
	2nd safety low water level control, PED approved		•	•	•
	Software safety limit for high water level		-	-	•
	Safety basic level switch for high water level	KIT HWL std	o	o	o
	Safety PED approved level switch for high water level	KIT HWL	o	o	o
TDS	Adjusting and safety system for the salt quantity dissolved in the boiler water	KIT TDS1	-	o	o
	Adjusting and safety system for the salt quantity dissolved in the boiler water equipped with self cleaning sensor	KIT TDS2	-	o	o
Drain	Time controlled drains with desludging function	KIT BLOW DOWN	o	o	o
Remote control	Alarm signal remotation	KIT REMOTE ALARM	-	o	o
	Via cable remote control system	KIT REMOTE CONTROL	-	-	o
	Via WEB remote control system	KIT WEB CONTROL	-	-	o
Service	Supervision for ordinary service works		-	-	•
	Supervision for extra-ordinary service works		-	-	•
Management	Exemption from continuous suveillance up to 24 hrs		-	-	o
	Exemption from continuous suveillance up to 72 hrs		-	-	o
	Total exemption (only for BAHR'UNO boilers)		-	o	o

LEGENDA	
-	NOT AVAILABLE
o	OPTIONAL
•	STD. SUPPLIED

Notes:
(1) Possible with external burner regulator

KIT COMPOSITION

for	BAHR'UNO	BAHR'12	TRYPASS'
with	BASIC	IMC	IML

KIT HWL std
high water level safety sensor



Kit Composition

- Nr. 1 electrode type sensor for high water level safety alarm

for	BAHR'UNO	BAHR'12	TRYPASS'
with	BASIC	IMC	IML

KIT HWL
"Fail safe", safety maximum water level switch, CE PED certified



Kit Composition

- Nr. 1 safety sensor 1/2" connection
- Nr. 1 sensor electrode in stainless steel
- Nr. 1 Safety regulator with self-diagnosis
- Electrical components

KIT COMPOSITION

KIT TDS 1

Salinity control group

for	BAHR'UNO	
with	IMC	IML

Kit Composition

Boiler water salinity control group through sensor for electrical water conductivity, made of:

- Conductivity sensor
- Flanged connecting pipe
- Gate valve
- Surface drain valve pneumatically actuated on high salinity/conductivity values
- Gasket
- Electrical kit with selectors and basic electronic regulator

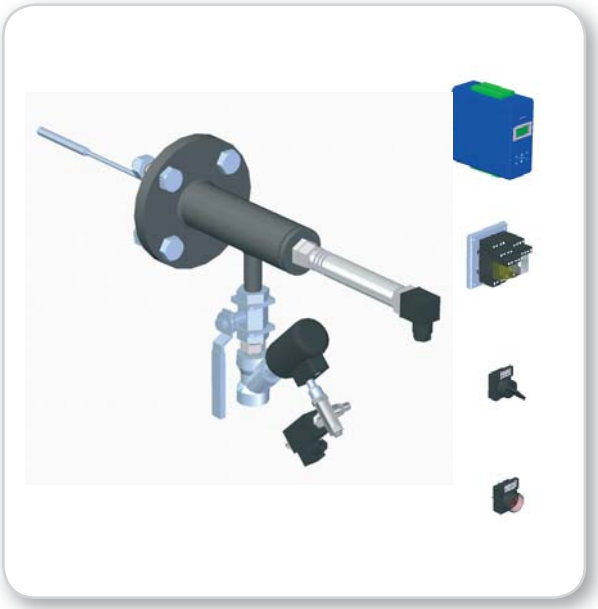

KIT TDS 2

Salinity control group

for	BAHR'UNO	
with	IMC	IML

Kit Composition

Boiler water salinity control group through sensor for electrical water conductivity, made of:

- Self cleaning conductivity sensor with temperature compensation for measurement of TDS
- Flanged connecting pipe
- Gate valve
- Surface drain valve pneumatically actuated on high salinity/conductivity values
- Gasket
- Electrical kit with selectors and advanced electronic regulator

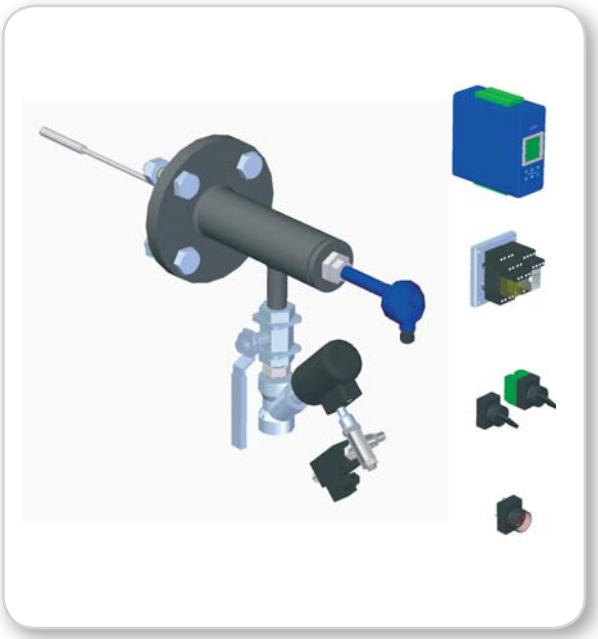

KIT COMPOSITION

KIT TDS 1

for	BAHR'12	TRYPASS'
with	IMC	IML

Salinity control group

Kit Composition

Boiler water salinity control group through sensor for electrical water conductivity, made of:

- Conductivity sensor
- Flanged connecting pipe
- Gate valve
- Surface drain valve pneumatically actuated on high salinity/conductivity values
- Gaskets
- Counterflange
- Electrical kit with selectors and basic electronic regulator



KIT TDS 2

for	BAHR'12	TRYPASS'
with	IMC	IML

Salinity control group

Kit Composition

Boiler water salinity control group through sensor for electrical water conductivity, made of:

- Self cleaning conductivity sensor with temperature compensation for measurement of TDS
- Flanged connecting pipe
- Gate valve
- Surface drain valve pneumatically actuated on high salinity/conductivity values
- Gaskets
- Counterflange
- Electrical kit with selectors and advanced electronic regulator



KIT COMPOSITION

KIT BLOW DOWN

Boiler bottom automatic drain group

for	BAHR'UNO
with	IMC

Kit composition

Automatic drain group, controlled by timer cycles with desliming function, made of:

- 90° gate valve
- Fast opening pneumatic valve
- Gaskets
- Counterflange
- Electrical kit (for IMC*)

*to be combined with KIT TDS 2



KIT BLOW DOWN

Boiler bottom automatic drain group

for	BAHR'UNO
with	IML

Kit composition

Automatic drain group, controlled by timer cycles with desliming function, made of:

- 90° gate valve
- Fast opening pneumatic valve
- Gaskets
- Counterflange
- Electrical kit (for IML)



KIT BLOW DOWN

Boiler bottom automatic drain group

for	BAHR'12	TRYPASS'
with	IMC	

Kit composition

Automatic drain group, controlled by timer cycles with desliming function, made of:

- 90° gate valve
- Fast opening pneumatic valve
- Gaskets
- Counterflange
- Electrical kit (for IMC*)

*to be combined with KIT TDS 2



KIT BLOW DOWN

Boiler bottom automatic drain group

for	BAHR'12	TRYPASS'
with	IML	

Kit composition

Automatic drain group, controlled by timer cycles with desliming function, made of:

- 90° gate valve
- Fast opening pneumatic valve
- Gaskets
- Counterflange
- Electrical kit (for IML)



KIT COMPOSITION

for	BAHR'UNO		
with	BASIC	IMC	IML

KIT 2nd PUMP

Kit second boiler water feeding pump

Kit composition

- A 2nd three phase 400V / 50 Hz motor pump
- Basement with vibration-damping feet
- Check valve
- Gate valve
- Fitting pipe



for	BAHR'12		TRYPASS'
with	BASIC	IMC	IML

KIT 2nd PUMP

Kit second boiler water feeding pump

Kit composition

- A 2nd three phase 400V / 50 Hz motor pump
- Basement with vibration-damping feet
- Check valve
- Gate valve
- Fitting pipe
- Gaskets
- Counterflange for feeding water connection



KIT COMPOSITION

for	BAHR'UNO	
with	IMC	IML

KIT EC (gas) / KIT EC (light oil)

Economizer kit
Efficiency increase: +3%

Kit composition

- Exchange battery with carbon steel finned pipes
- Modulating valve
- Transformation piping
- Thermometer



for	BAHR'12	
with	IMC	IML

KIT EC (gas) / KIT EC (light oil)

Economizer kit(1)
Efficiency increase: +4%

Kit composition

- Exchange battery with carbon steel finned pipes
- Modulating valve (Inverter as per model 2000)
- Transformation piping
- Thermometer

(1) Inverter as per model 2000



for	TRYPASS'	
with	IMC	IML

KIT EC (gas) / KIT EC (light oil)

External economizer kit
Efficiency increase: +5%

Kit composition

- Exchange battery with carbon steel finned pipes
- Kit Inverter (IML) / Kit Modul V (IMC)
- Transformation piping
- Thermometer

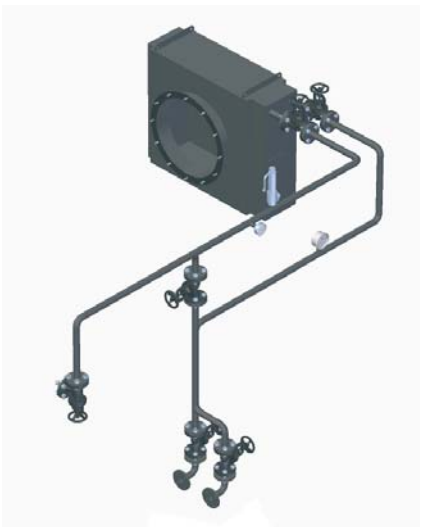

KIT COMPOSITION

for BAHR'UNO
with IMC

KIT MODUL V

Water level modulation

Kit composition

- Tank and level capacitive sensor
- Solenoid valve for flow rate adjustment
- Connection piping
- Electrical kit for IMC



for BAHR'UNO
with IML

KIT MODUL V

Water level modulation

Kit composition

- Tank and level capacitive sensor
- Solenoid valve for flow rate adjustment
- Connection piping



KIT COMPOSITION

for BAHR'12 TRYPASS'
with IMC

KIT MODUL V
Water level modulation

Kit composition

- Tank and level capacitive sensor
- Pneumatic valve for flow rate adjustment
- Connection piping
- Electrical kit for IMC



for BAHR'12 TRYPASS'
with IML

KIT MODUL V
Water level modulation

Kit composition

- Tank and level capacitive sensor
- Pneumatic valve for flow rate adjustment
- Connection piping



for BAHR'12 TRYPASS'
with IML

KIT MODUL INVERTER
Water level modulation

Kit composition

- Additional inverter board panel

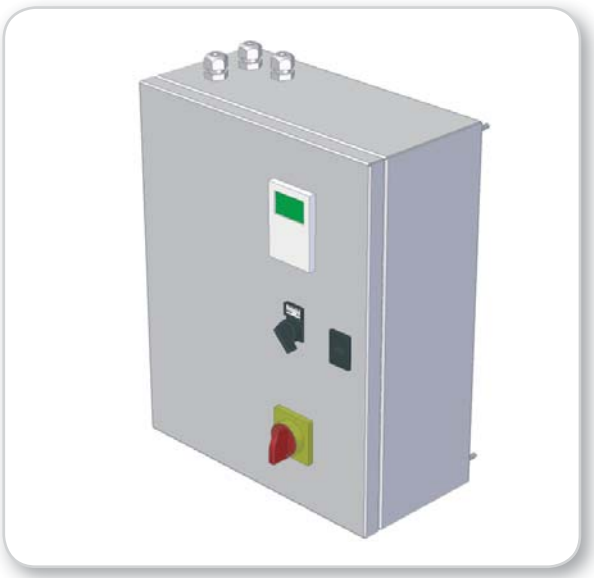

KIT COMPOSITION

for BAHR'UNO'

2nd LEVEL GAUGE KIT

Kit composition

- Reflexion type level gauge

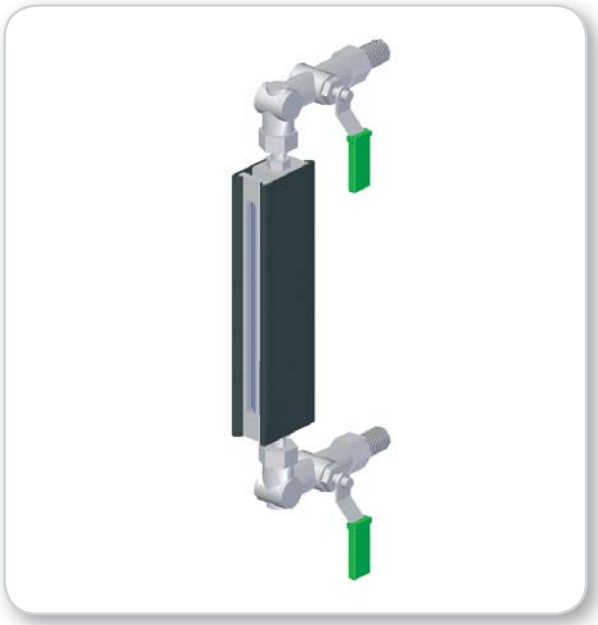

for BAHR'12 TRYPASS'

2nd LEVEL GAUGE KIT

Kit composition

- Reflexion type level gauge
- Gaskets



KIT COMPOSITION

for BAHR'12 TRYPASS'

KIT SAMPLE COOLER

Water samples cooling group

Samples of boiler water need to be analysed on a regular basis to check if its values are within correct parameters.
Bad water quality is a major cause of boiler damages.
Sample cooler is necessary to take samples safely cooling them down; it suppresses flash steam also, ensuring accurate samples.

The cooler consists of a stainless steel coil, through which the sample flows, and a stainless steel body, through which cooling water flows in the opposite direction.

Kit composition

The cooler is composed by the following parts:

- Stainless steel cooler
- Sample inlet valve
- Cooling water inlet valve
- Connection piping



for BAHR'12 TRYPASS'
with IMC IML

KIT DRY RUN PROTECTION

Protection against dry operation of the water pump

Kit composition for one pump

- Nr. 1 Pressure switch and fitting
- Electrical kit for IMC/IML

Kit composition for two pumps

- Nr. 2 Pressure switches and fittings
- Electrical kit for IMC/IML



for BAHR'UNO BAHR'12 TRYPASS'
with IMC IML

KIT REMOTE ALARM

Alarms remotation

Kit composition

- Relay PCB with wiring harness interface

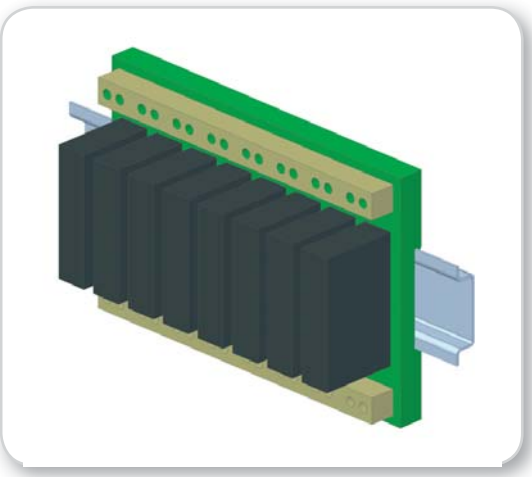

KIT COMPOSITION

for BAHR'UNO BAHR'12 TRYPASS'
with IMC IML

KIT SIGNAL TOWER

Kit composition

- Luminous signalling tower



for BAHR'UNO BAHR'12 TRYPASS'
with IML

KIT REMOTE WEB CONTROL 3G

Kit composition

- Ethernet Router - 4 ports / modem 3G
- Antenna
- Connecting cables for touch-screen and PLC



for BAHR'UNO BAHR'12 TRYPASS'
with IML

KIT REMOTE WEB CONTROL ADSL

Kit composition

- Ethernet Router - 4 ports / modem ADSL
- Connecting cables for touch-screen and PLC

