Kalorina series 22 EPA

Electronic pellet boiler

TATANO
renewable energies

Kalorina series 22 EPA

Electronic pellet boiler

FUELS

- Wood pellets
- Wood
- Olive husk
- Marc of olives
- Minced shells
- Cereals (for models BK)



REMOTE ASSISTANCE
REMOTE CONTROL
REMOTE ALARMS

On the control panel there is a USB port for PC connection through internet.

A technical can interact with your boiler and makes all the necessary settings.

EFFICIENT SOLUTIONS ADAPTED TO EVERY NEED

The addition of the "PA" Kit – Automatic Cleaning - transforms the boiler Kalorina 22 E in a self-cleaning boiler Kalorina 22 EPA that minimizes maintenance, ensuring a perfect cleaning of the tubes and the automatic extraction of ash.

The PA kit includes:

Pneumatic cleaning oh the heat exchanger.

Combustion chamber extractor of ash.

Ashtray.

Electronic monitoring of the cleaning devices.

Programming of the cleaning cycles.

Advantages:

Clean combustion.

High performance.

Reduced fuel consumption.

Optimal emission values.



Pneumatic cleaning of the heat exchanger



Ash extraction: combustion chamber

Kalorina series 22		K 2202 E	K 2203 E	K 2204 E	K 2206 E	K 2208 E	K 2210 E
Nominal power	kW	23	29	46	69	93	115
Maximum allowable working pressure	bar	3	3	3	3	3	3
Boiler Class	EN 303-5: 1999 Class 3						
Maximum allowable working temperature	°C	90	90	90	90	90	90
Water content	L	64	116	116	158	200	245
Dimensions mm	width	1250	1350	1350	1350	1350	1350
	depth	850	980	980	1180	1380	1700
	height	1127	1276	1276	1276	1276	1276
Pipes Ø	flow	2"	2"	2"	2"	2"	2"
	return	1"	1" ½	1" ½	1" ½	1" ½	1" ½
	expansion tank	1"	1"	1"	1"	1"	2"
Chimney flue	Ø mm	150	200	200	200	200	250

INSTALLATION DRAWINGS

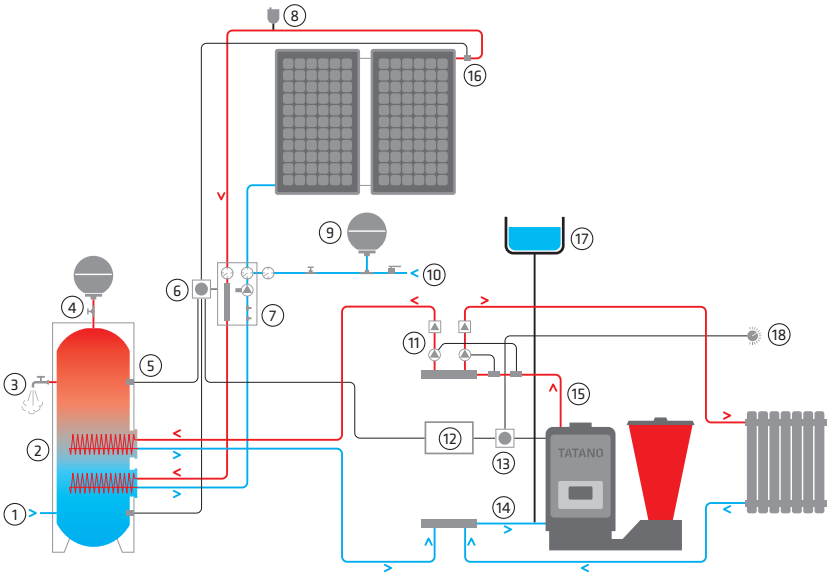

Biomass boiler for heating and water production with the integration of a 300 Lt centralized solar system

1 Cold water input
2 Lt 300 tank
3 Hot water output
4 Safety valve
5 Temperature sensor
6 Control unit
7 Adjustment unit
8 Bleed valve air
9 Closed expansion tank
10 Group of automatic filling
11 Collector, pump, non-return valve and sensors
12 Contactors panel
13 Boiler control panel
14 Return
15 Fluid flow
16 Sensor
17 Open expansion tank
18 Thermostat

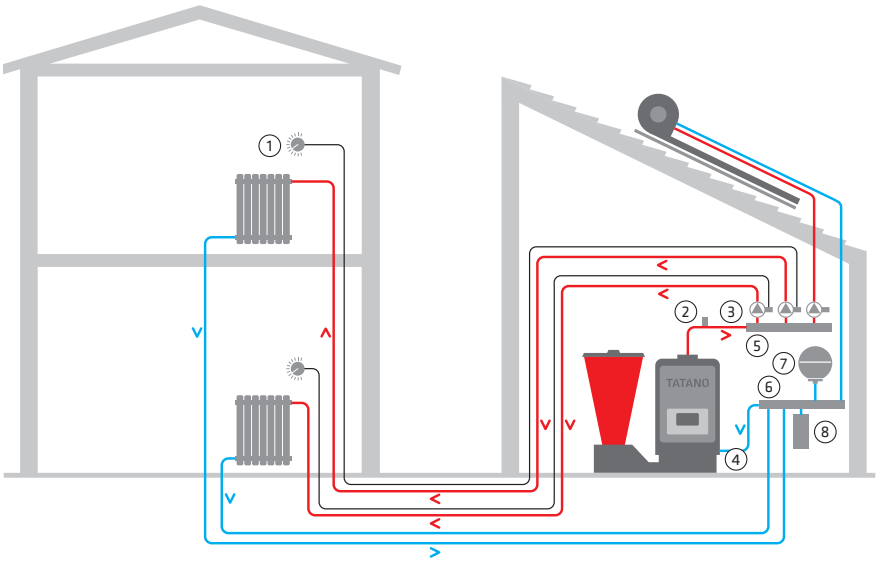

Biomass boiler for heating and water production with integration of natural circulation thermal solar

1 Thermostat
2 Safety valve
3 Fluid flow
4 Return
5 Collector and pumps
6 Collector return
7 Closed expansion tank
8 Group of automatic filling

STORAGE/EXTRACTION SYSTEMS

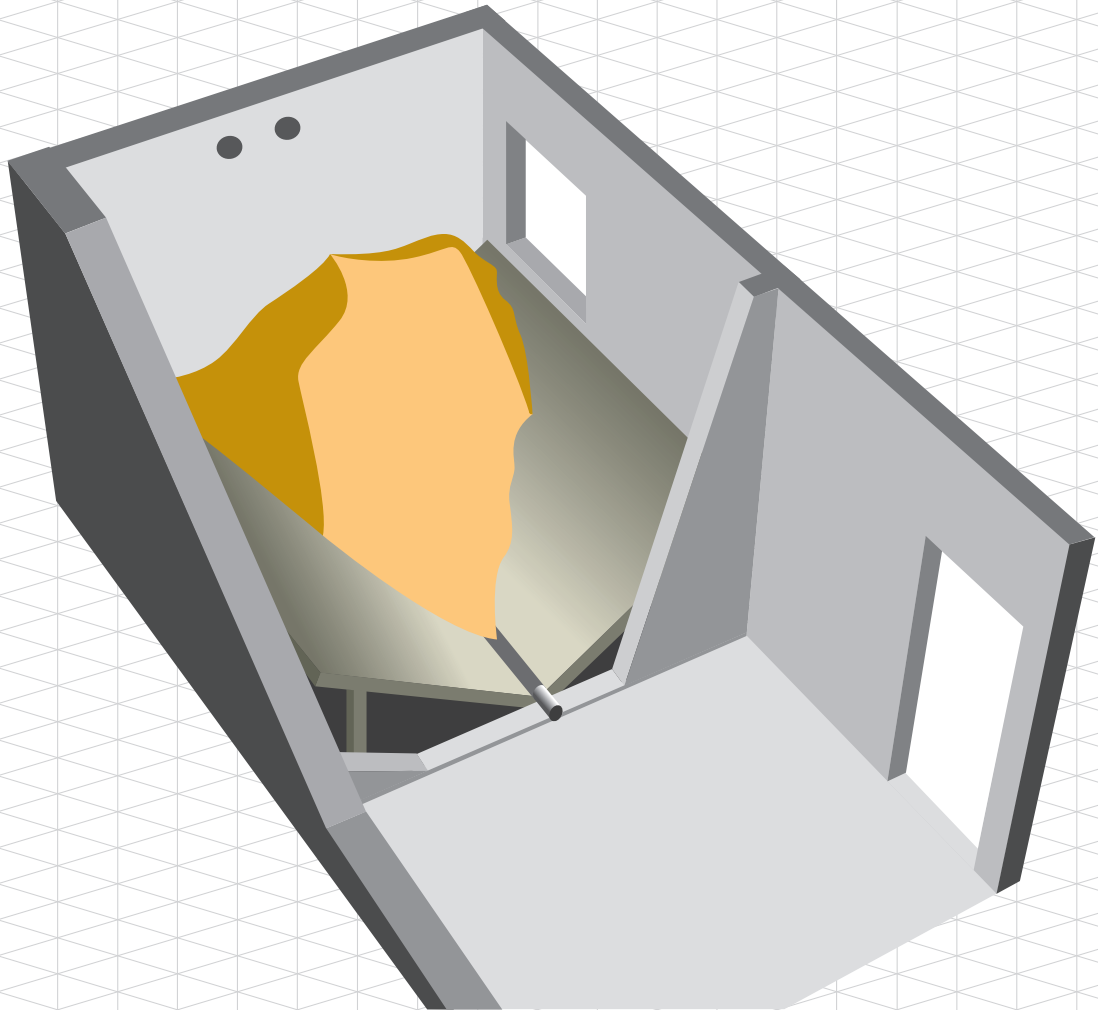

Storage for pellet / wood chips

The stock is the classic solution for storing the fuel and having a greater autonomy.

The best extraction technique depends on the requirements of your home. Our extraction systems are: the adjustable feeder, the auger or the spring transport system.

Systems for extraction

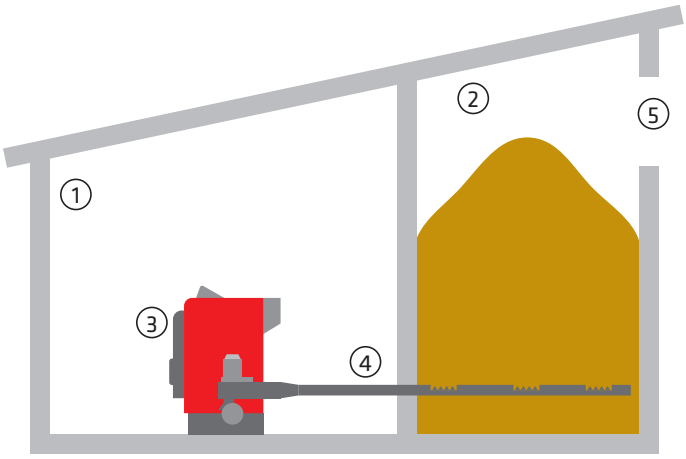

Extraction by adjustable feeder.
The storage is located near the boiler compartment.

1 Boiler compartment
2 Fuel storage hopper
3 Biomass boiler
4 Adjustable feeder
5 Trapdoor loading fuel

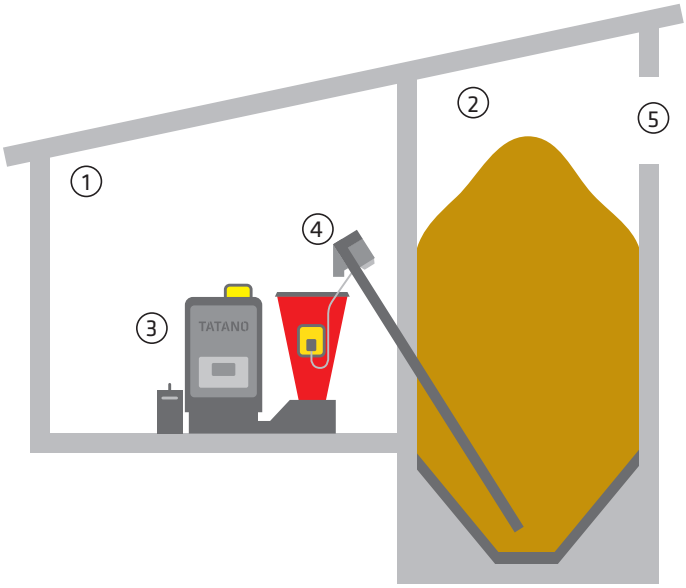

Extraction by motorized auger.
The storage is located near the boiler compartment or underground.

1 Boiler compartment
2 Fuel storage hopper
3 Biomass boiler
4 Motorized auger complete with sensor for fuel level
5 Trapdoor loading fuel

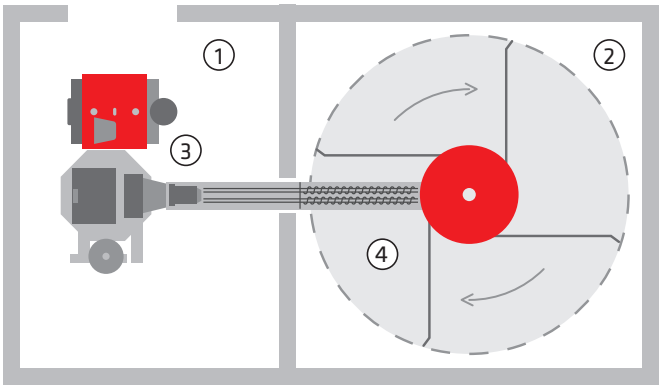

Extraction by leaf spring agitator.
The storage is located near the boiler room.

1 Boiler compartment
2 Fuel storage hopper
3 Biomass boiler
4 Transport system

Boilers
made in Italy

TATANO s.n.c.

Zona ind.le / Scalo ferroviario
92022 Cammarata (Ag), Italy

Via F. Cassoli, 29
29122 Piacenza, Italy

Biomass boilers
Solar system

Tel. +39 0922 901376
Fax +39 0922 902600

Tel. +39 0523 609788
Fax +39 0523 574274

tatano@tatano.it
www.tatano.it