Kalorina series 23

Electronic chips boiler

TATANO
renewable energies

KALORINA SERIES 23

Electronic chips

FUELS
series 23

- Wood chip
- Wood pellet
- Sawdust
- Wood
- Olive husk
- Marc of olives
- Minced shells
- Cereals (for models BK)
- Shavings



REMOTE ASSISTANCE
REMOTE CONTROL
REMOTE ALARMS

On the control panel there is a USB port for PC connection through internet.

A technical can interact with your boiler and makes all the necessary settings.

THE BEST ALTERNATIVE IN TERMS OF ENERGY SAVINGS AND EFFICIENCY

Kalorina Series 23/E is an excellent alternative in terms of energy conservation and efficiency, as it uses a renewable energy such as waste wood for heat production at low cost, ensuring quality and safety.

The system stands out for its versatility, it is designed to use different fuels in addition to wood chips (pellets, wood, and all compatible biomasses), for automatic operation and easy maintenance.

In the range of power ratings between 29 and 115 kW, you can also have the Hydro version (46-69 kW); the wood chips/pellets boilers distinguish for their performance.

An ideal solution for heating all types of environment: single family home or multi-level, small and medium-sized farms and schools.

IMQ primacontrol
ICIM
CISQ eco
AZIENDA CERTIFICATA UNI EN ISO 14001



Bio-fuel Burner (preparation)



Combustion chamber



Anti-fire kit (standard)

Features:

Solid and strong construction.

Horizontal tube heat exchanger for a maximum heat transfer.

Electronic control panel for a programmed and automatic combustion, which includes: the auto ignition, the adjustment of the boiler with the exact dosing of fuel and air, the possibility to reduce automatically the thermal power in modulation up to 70% of full power, the maintenance of the fire.

Clean combustion system (CCS), which combines an innovative air distribution of post-combustion ensuring the flue gas cleaning and a greater thermal efficiency.

A 450 litres storage hopper equipped with a radial agitator and a fuel sensor end.

Possibility to place the hopper on the right and the left hand side.

Tele-assistance service that allows you to monitor and intervene by distance: through an output standard USB connection to PC.

Anti-Fire kit.

Depending on the type of fuel and the type of functioning, the system can be equipped with some kit of accessories to meet different customer needs:

Burner for boiler operation with liquid or gaseous fuel when in absence of solid fuel.

Remote control module and remote alarms that allows the system management via SMS (on/off) and the possibility of viewing the operational status.

Kalorina series 23		**K 2303 E**	**K 2304 E**	**K 2306 E**	**K 2308 E**	**K 2310 E**
Nominal power	kW	29	46	69	93	115
Maximum allowable working pressure	bar	3	3	3	3	3
Boiler class		EN 303-5: 1999 Classe 3				
Maximum allowable working temperature	°C	90	90	90	90	90
Water content	L	116	116	158	200	245
Dimensions mm	width	1735	1735	1735	1735	1735
	depth	980	980	1180	1380	1700
	height	1276	1276	1276	1276	1276
Pipes Ø	flow	2"	2"	2"	2"	2"
	return	1" ½	1" ½	1" ½	1" ½	1" ½
	expansion tank	1"	1"	1"	1"	2"
Chimney flue	Ø mm	200	200	200	200	250

INSTALLATION DRAWINGS

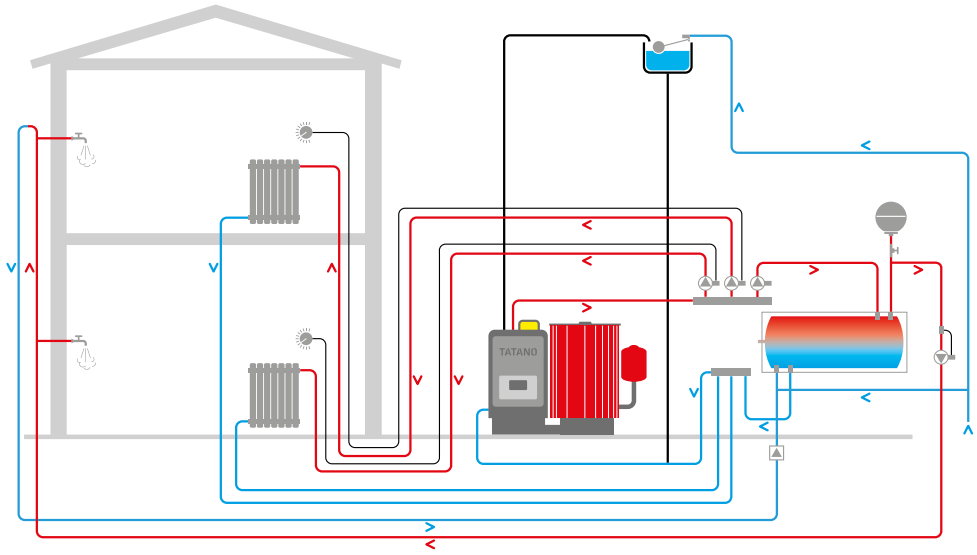

Classic installation for radiators and biomass boiler for heating and water production in multi-dwelling houses

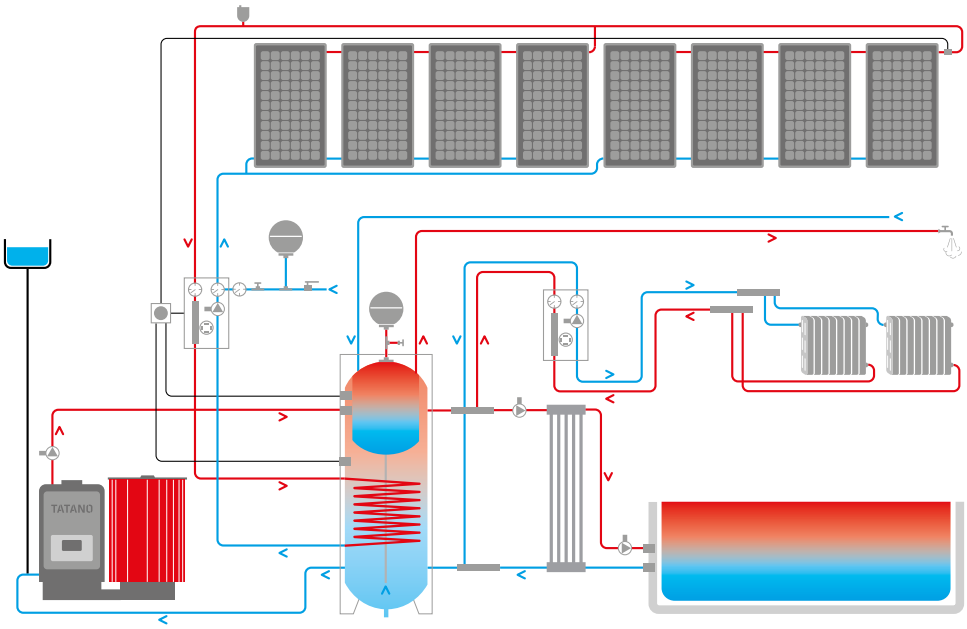

Forced central solar system integrated with a biomass boiler

STORAGE/EXTRACTION SYSTEMS

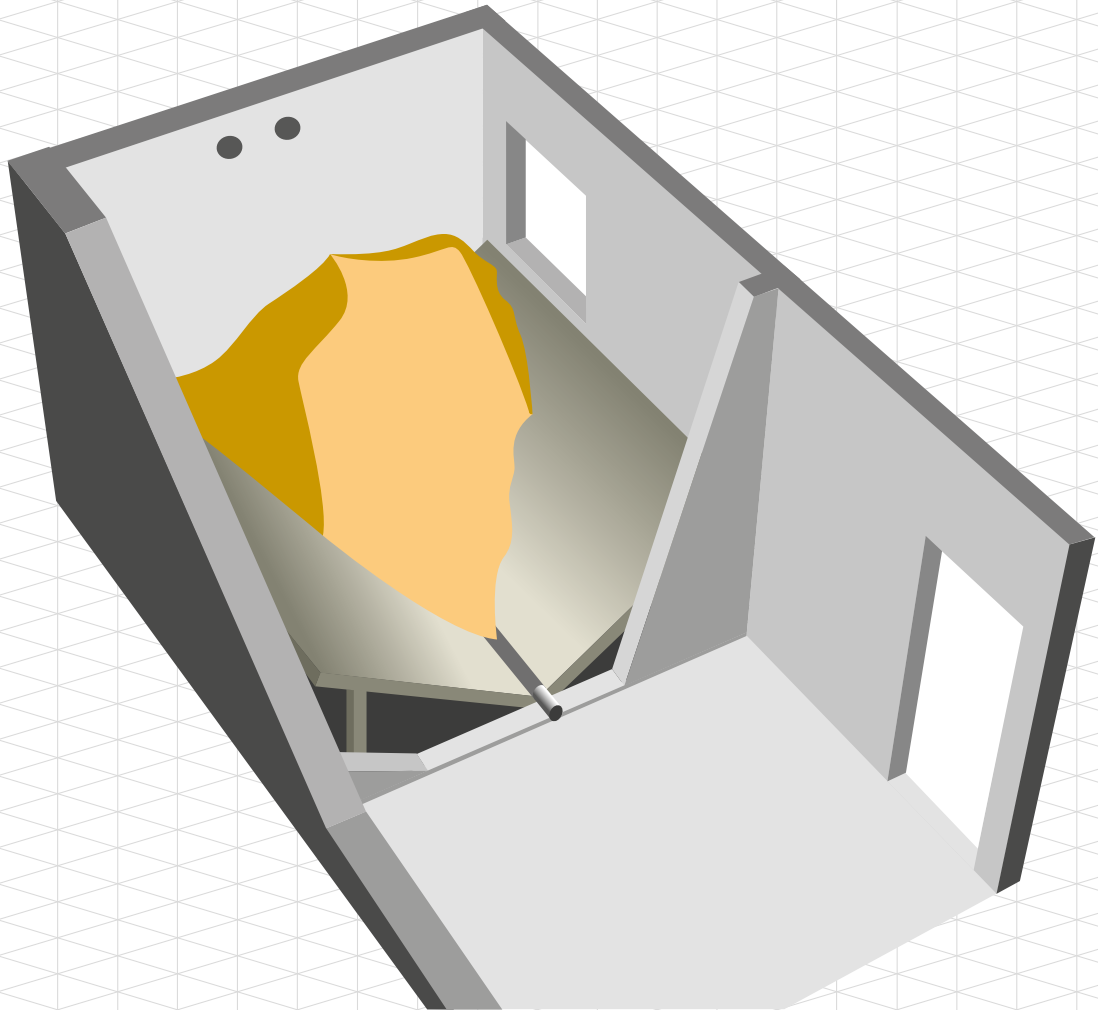

Storage for pellet / wood chips

The stock is the classic solution for storing the fuel and having a greater autonomy.

The best extraction technique depends on the requirements of your home. Our extraction systems are: the adjustable feeder, the auger or the spring transport system.

Systems for extraction

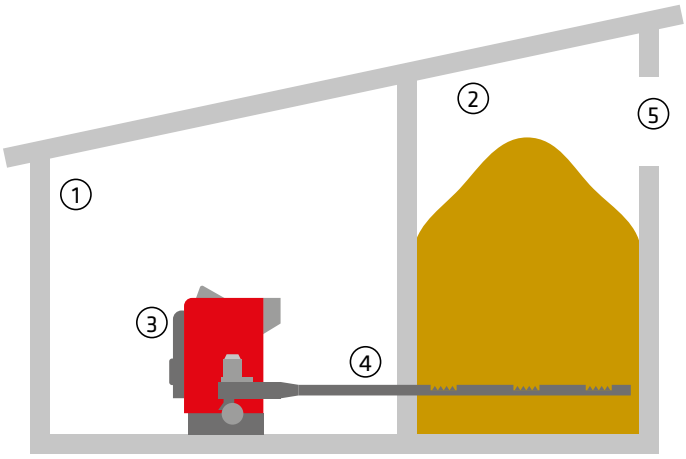

Extraction by adjustable feeder.
The storage is located near the boiler compartment.

1 Boiler compartment
2 Fuel storage hopper
3 Biomass boiler
4 Adjustable feeder
5 Trapdoor loading fuel

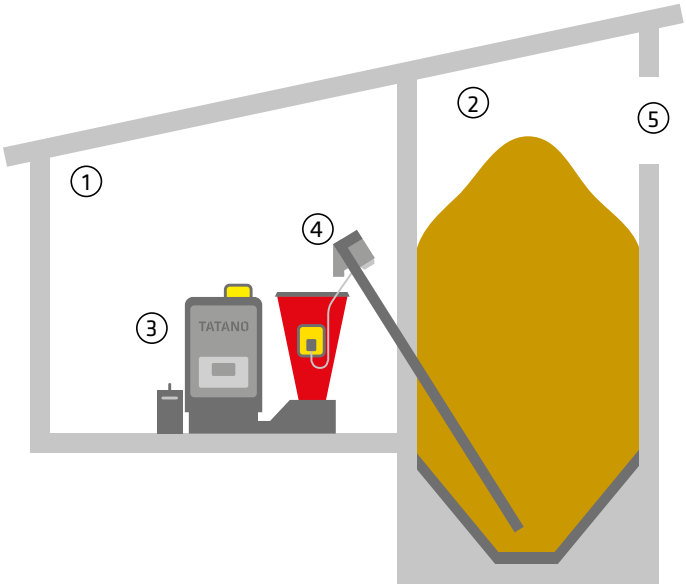

Extraction by motorized auger.
The storage is located near the boiler compartment or underground.

1 Boiler compartment
2 Fuel storage hopper
3 Biomass boiler
4 Motorized auger complete with sensor for fuel level
5 Trapdoor loading fuel

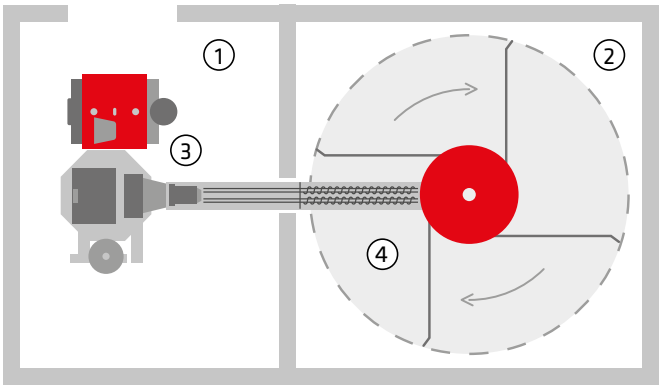

Extraction by leaf spring agitator.
The storage is located near the boiler room.

1 Boiler compartment
2 Fuel storage hopper
3 Biomass boiler
4 Transport system

Boilers
made in Italy

TATANO s.n.c.

Zona ind.le / Scalo ferroviario
92022 Cammarata (Ag), Italy

Via F. Cassoli, 29
29122 Piacenza, Italy

Biomass boilers
Solar system

Tel. +39 0922 901376
Fax +39 0922 902600

Tel. +39 0523 609788
Fax +39 0523 574274

tatano@tatano.it
www.tatano.it