7/S5
v 2.9 (en)

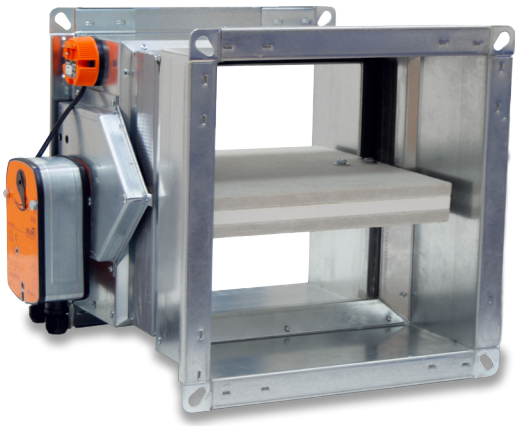

FIRE DAMPER

FD40

TABLE OF CONTENTS

FIRE DAMPER FD40	371
FIRE CLASSIFICATION	371
SELECTION DIAGRAM	372
ORDERING KEY	372
DAMPER MODELS	373
FD40-M rectangular fire damper with electrical actuator	373
FD40-R rectangular fire damper with manual mechanism	373
FD40-E rectangular fire damper with solenoid actuator	374
INSTALLATION OPTIONS	375
Installation in a rigid wall (mortar based)	375
Installation in a flexible wall (mortar based)	375
Installation in ceiling (mortar based)	376
Installation in a rigid wall (mortarless)	376
Installation in a flexible wall (mortarless)	377
Installation in ceiling (mortarless)	377
Installation remote from wall	378
Suspension for mortarless installation	378
ACCESSORIES	379
Fexible connectors	379
Cover grille	379
OPERATING INSTRUCTIONS	380
FD40-R rectangular fire damper with manual mechanism	380
FD40-E rectangular fire damper with solenoid actuator	380
Electrical characteristics and wiring scheme for a Belimo actuator	381
FIRE DAMPER CONTROL	382

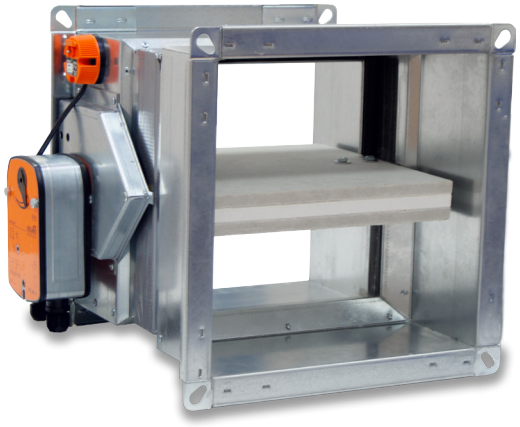

FIRE DAMPER FD40

- Used for the isolation of duct penetrations between fire compartments.
- Fire dampers consist of housing, fire-resistant damper blade and release mechanism.
- Casing made of galvanised sheet steel, damper blade made of special insulating material, damper blade shaft and push rod made of stainless steel, bearings made of brass, seals made of polyurethane and elastomer.

DIMENSIONS

Min. dimensions B(W) x H [mm]	Max. dimensions B(W) x H [mm]
200x200	1500x800

All possible combinations of width and height are available.
Standard dimensions are avaliable with increments of 50mm.

FIRE CLASSIFICATION (according to EN 13501-3)

Fire resistance of fire damper depends on classification of walls or ceilings. It is allowed to install product to walls or ceilings as specified in table 1. Walls or ceilings with greater fire resistance can also be used. Fire damper should be installed according installation manual which can be found within this document.

Table 1

Wall details	Sealing	Thickness [mm]	Density [kg/m³]	Dimensions BxH [mm]	Classification
Rigid wall	**Mortar or gypsum**	≥100	≥650		EI 120 S
Rigid wall	**(Weichschott) mineral wool >140kg/m3+coating**	≥100	≥650		EI 120 S
Rigid wall	**Remote from wall**	≥100			EI 120S
Standard plasterboard wall (GKB, GKF)	**Mortar or gypsum+ cover boards (Masterboard)**	≥100			EI 60 S
Standard plasterboard wall (GKF)	**Mortar or gypsum+ cover boards (Masterboard)**	≥125			EI 90 S
Standard plasterboard wall (GKF)	**Mortar or gypsum+ cover boards (Masterboard)**	≥150			EI 120 S
Standard plasterboard wall (GKB, GKF)	**(Weichschott) mineral wool >140kg/m3 +coating**	≥100		Max. 1500x800	EI 60 S
Standard plasterboard wall (GKF)	**(Weichschott) mineral wool >140kg/m3 +coating**	≥125			EI 90 S
Standard plasterboard wall (GKF)	**(Weichschott) mineral wool >140kg/m3 +coating**	≥150			EI 120 S
Ceiling	**Mortar or gypsum**	≥125	≥650		EI 90 S
Ceiling	**Mortar or gypsum**	≥150	≥650		EI 120 S
Ceiling	**(Weichschott) mineral wool >140kg/m3 +coating**	≥125	≥650		EI 90 S
Ceiling	**(Weichschott) mineral wool >140kg/m3 +coating**	≥150	≥650		EI 120 S

SELECTION DIAGRAM

Symbol:

v - air velocity in the duct [m/s]
Δp_t - total pressure loss [Pa]
L_{WA} - sound power level [dB(A)]

Total pressure loss and sound power level:

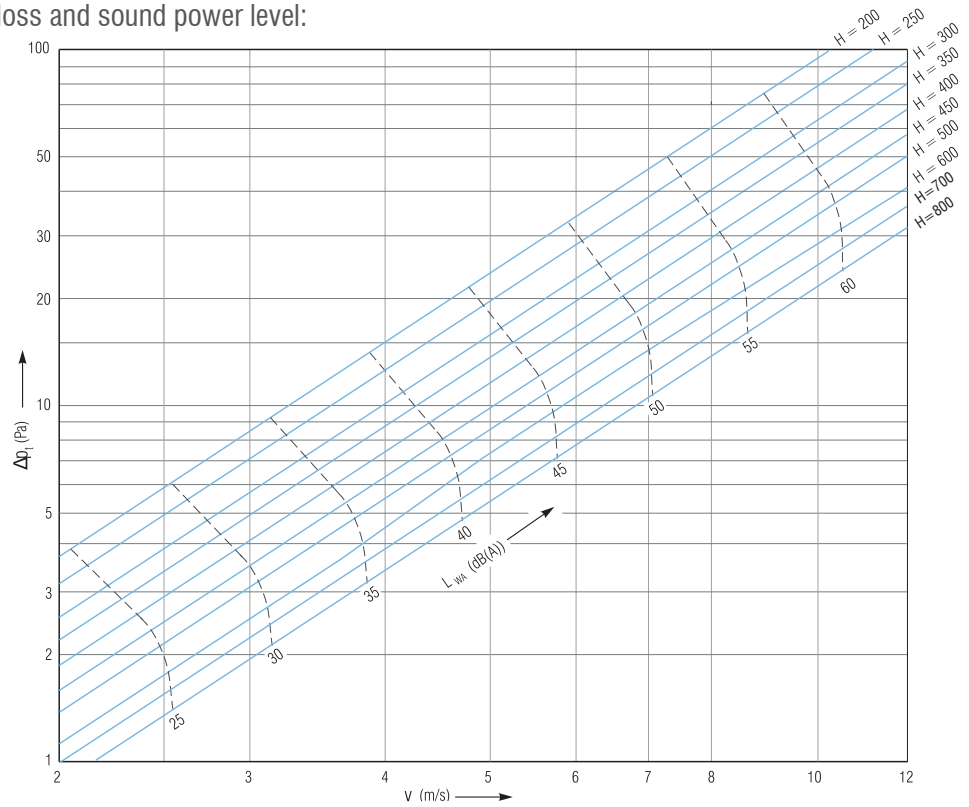

The values of total pressure loss for other sizes are obtained in a manner that read value from the graph is multiplied with the correction value from the table. Value of sound power are obtained in a manner that read value is added the correction value from the table.

B [mm]	200	250	300	350	400	450	500	550	600	650	700	750	800	850	900	950	1000-1200	1200-1500
Δp_t x	1,22	1,14	1,07	1,0	0,94	0,88	0,83	0,77	0,73	0,68	0,64	0,6	0,58	0,56	0,55	0,54	0,5	0,4
L_{wa} +	-1	-1	0	0	0	0	0	0	0	0	1	1	2	2	2	3	3	4

ORDERING KEY

Damper type	FD40	- 400x300	- M230	- S	- G1

Damper dimensions
B(W) x H [mm]

Mechanism type:
R - manual mechanism
E230 - solenoid actuator AC230V
E24 - solenoid actuator AC 24V
M230 - electric actuator AC230V
M24 - electric actuator AC/DC 24V

Options:
s - electric limit switches (indicating damper “OPEN” and “CLOSED”)
z - electric limit switch (indicating damper “CLOSED”)
o - electric limit switch (indicating damper “OPEN”)

Grille:
G1 - grid on one side
G2 - grid on both sides

Design changes reserved

DAMPER MODELS

FD40-M rectangular fire damper with electric actuator

- Thermoelectric activation (72°C) with electric actuator and return spring
- Integrated end switches
- Fully automatic operation
- Networking capability (MP-BUS, LonWorks, AS-i BUS)

Options:

M230 – electric actuator AC 230V
M24 – electric actuator AC/DC 24V

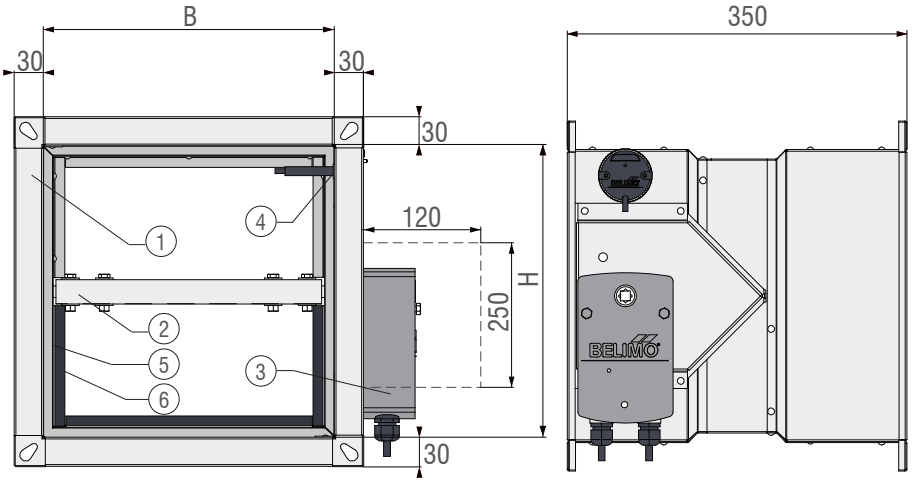

1. fire damper housing
2. damper blade
3. electric actuator: Belimo BLF
4. thermo-electric tripping device (72°C)
5. smoke seal
6. intumescent strip

FD40-R rectangular fire damper with manual mechanism

- automactic closure when the temperature in the duct exceed 72°C
- manual rearmation with handle
- manual unlocking possible for periodical test of fire damper

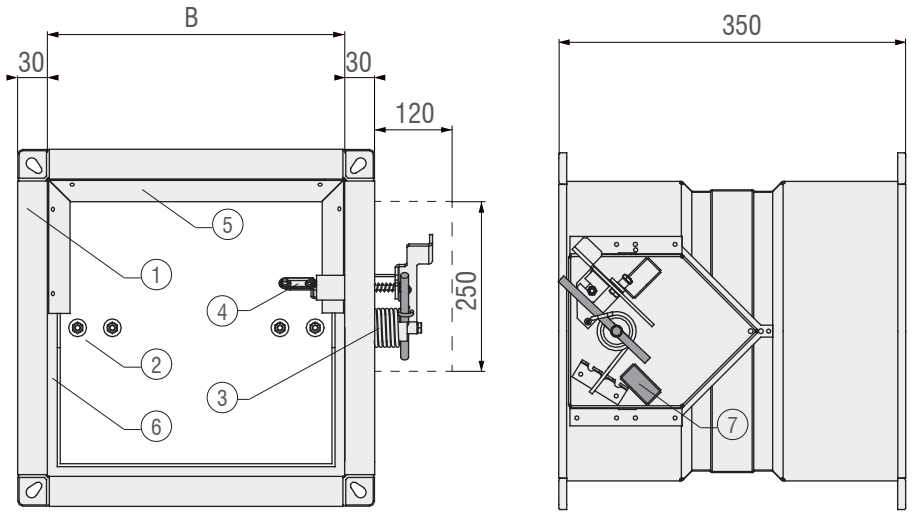

1. fire damper housing
2. damper blade
3. manual mechanism
4. fusible link (72°C)
5. smoke seal
6. intumescent strip
7. limit switch

FD40-E rectangular fire damper with solenoid actuator

- spring return actuator with integrated limit switches and thermoelectric release mechanism (72°C)
- manual rearmation with handle
- possible closing with solenoid
- manual closing possible

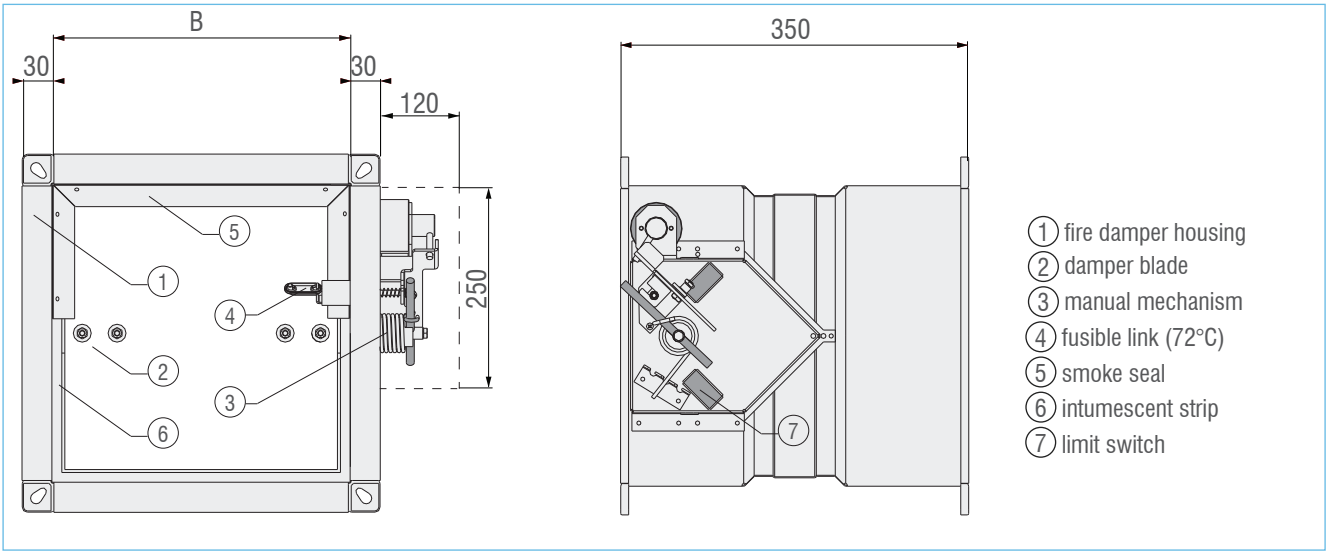

1. fire damper housing
2. damper blade
3. manual mechanism
4. fusible link (72°C)
5. smoke seal
6. intumescent strip
7. limit switch

All installation opportunities are valid for:

Installation onto duct in positions mentioned on picture below:

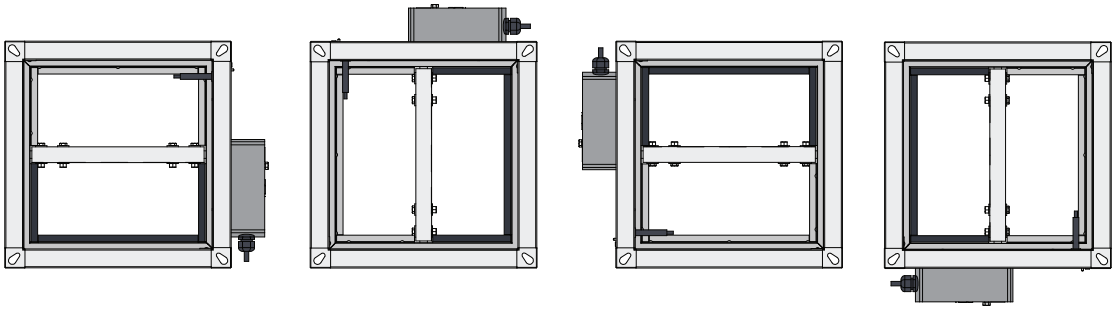

- Airflow and fire protection in both sides
- Closed blade air leakage according to EN 1751, class 2
- Casing air leakage to EN 1751, class C (on demand)
- Fire damper can be equipped with thermic fuse with 72°C or for warm air ventilation systems 95°C release temperature
- Fire damper casing is manufactured form galvanized steel, but on demand can be made from:

  Galvanized steel and powder coated
  Stainless steel
  Stainless steel and powder coated
  Fire damper for areas with potentially explosive atmospheres
  are also available (for additional information see FD-Ex catalog)

Design changes reserved

INSTALLATION OPTIONS

Installation in a rigid wall (mortar based)

Installation steps:

- Recommended wall opening for fire damper installation is B+ 160mm, but openings from B+80*…200 mm can also be used (***decrease under specified value in opening size is allowed if there is sufficient room for seal installation**)
- Insert fire damper into wall and secure on wall face with two hinges that are placed on the top of fire damper casing. Hinges are used to hold only damper during installation! (for max. distance from wall 80 mm)
- Damper blade must be closed during installation
- Space between casing and wall must be filled with mortar, gypsum or concrete
- Test the fire damper after the installation
- During installation, manual or motorized mechanism must be protected from mortar, gypsum or concrete.

① Standard mortar or gypsum
② Fire damper FD40
③ Wall, according to table 1

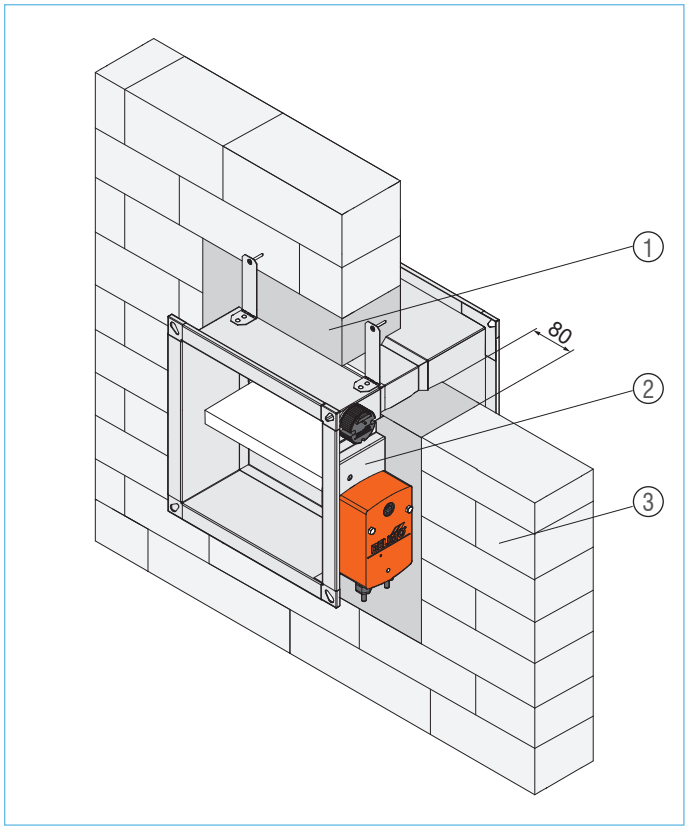

After installation check for damper blade mobility, preform an opening and closing test.

Installation in a flexible wall (mortar based)

Installation steps:

- Recommended wall opening for fire damper installation is B(H) + 160mm, but openings from B(H) +80…200 mm can also be used
- Insert fire damper into wall and secure on wall face with two hinges that are placed on the top of fire damper casing. Hinges are used to hold only damper during installation! (for max. distance from wall 80 mm)
- Damper blade must be closed during installation
- Space between casing and wall must be filled with mortar or gypsum
- Mortar or gypsum must be covered with fire resistant boards that are secured onto wall face with screws
- Test the fire damper after the installation
- During installation, manual or motorized mechanism must be protected from mortar and dust.

① Standard mortar or gypsum
② Masterboard thickness 20mm
③ Screw for gypsum plasterboard
④ Fire damper FD40
⑤ Wall, according to table 1

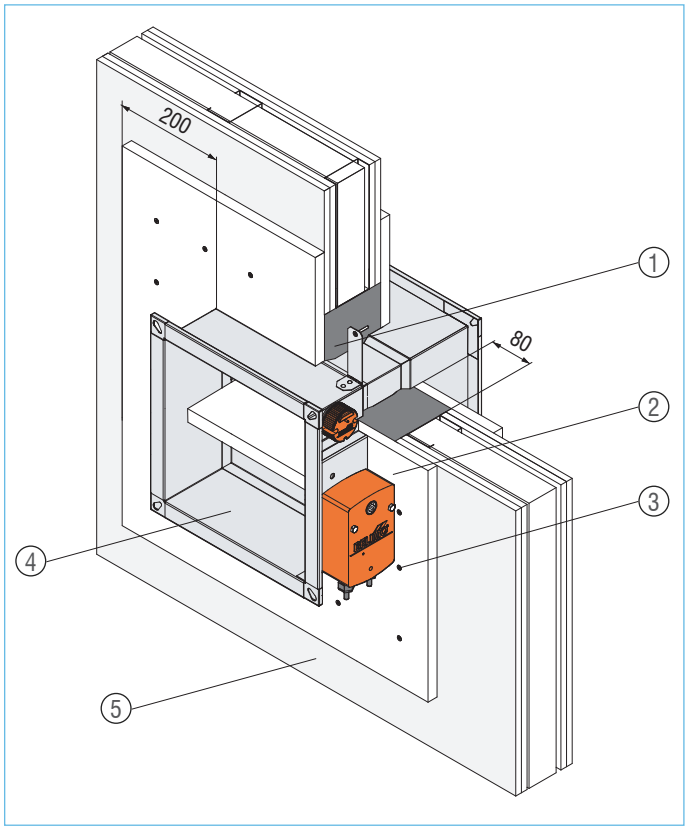

After installation check for damper blade mobility, preform an opening and closing test.

Installation in ceiling (mortar based)

Installation steps:

- Recommended ceiling opening for fire damper installation is B+ 160mm, but openings from B+80*…200 mm can also be used (***decrease under specified value in opening size is allowed if there is sufficient room for seal installation**)
- Insert fire damper into ceiling and secure on ceiling face with two hinges that are placed on the top of fire damper casing. Hinges are used to hold only damper during installation! (for max. distance from wall 80 mm)
- Damper blade must be closed during installation
- Space between casing and ceiling must be filled with mortar, gypsum or concrete
- Test the fire damper after the installation
- During installation, manual or motorized mechanism must be protected from mortar, gypsum or concrete.

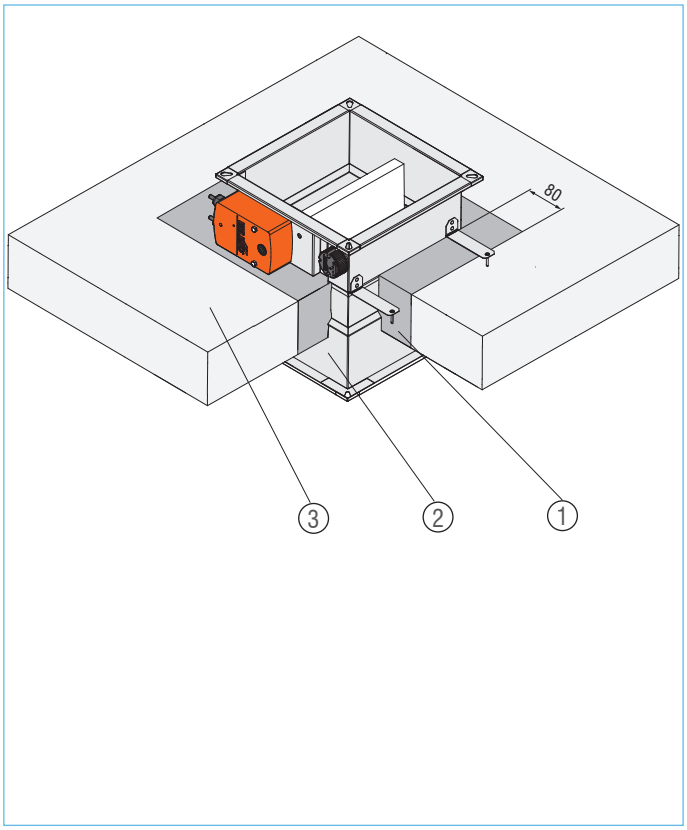

① Standard mortar or gypsum
② Fire damper FD40
③ Ceiling, according to table 1

After installation check for damper blade mobility, preform an opening and closing test.

Installation in a rigid wall (mortarless)

Installation material: Fire damper FD40, Mineral wool >140kg/m³, Fire protection coating, (HILTI weichschott system)

Installation steps:

- Recommended wall opening for fire damper installation is B(H) + 400mm, but openings from B(H) +80…600 mm can also be used
- Insert fire damper into wall
- Damper blade must be closed during installation!!!
- Space between casing and wall must be closed with three layers of mineral wool (density 140 kg/m³ or more, coated on one side)
- Cut additional 50 mm straps to cover perimeter of damper and wall from three sides (bottom one is not needed)
- Connections of mineral wool must be sealed with intumescent fire resistant sealant
- Mineral wool and damper casing must be coated with 2 mm thick fire protection coating
- Actuator and release unit must not be coated!!!
- Test the fire damper after the installation

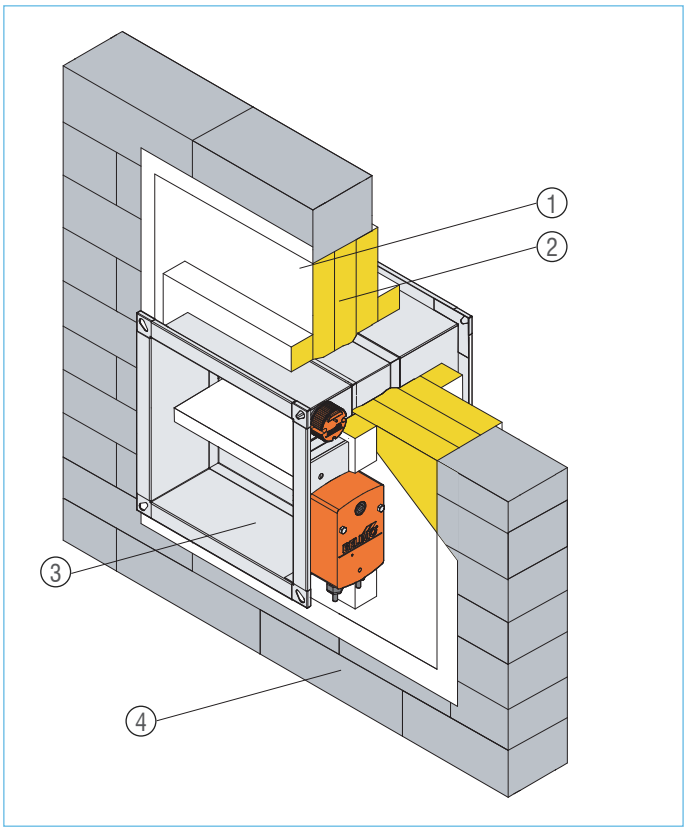

① Fire protection coating
② Mineral wool insulation
③ Fire damper FD40
④ Wall, according to table 1

After installation check for damper blade mobility, preform an opening and closing test.

Design changes reserved

Installation in a flexible wall (mortarless)

Installation material: Fire damper FD40, Mineral wool >140kg/m³, Fire protection coating, (HILTI weichschott system)

Installation steps:

- Recommended wall opening for fire damper installation is B(H) + 400mm, but openings from B(H) +80…600 mm can also be used
- Insert fire damper into wall
- Damper blade must be closed during installation!!!
- Space between casing and wall must be closed with three layers of mineral wool (density 140 kg/m³ or more, coated on one side)
- Cut additional 50 mm straps to cover perimeter of damper and wall from three sides (bottom one is not needed)
- Connections of mineral wool must be sealed with intumescent fire resistant sealant
- Mineral wool and damper casing must be coated with 2 mm thick fire protection coating
- Actuator and release unit must not be coated!!!
- Test the fire damper after the installation

① Fire protection coating
② Mineral wool insulation
③ Fire damper FD40
④ Wall, according to table 1

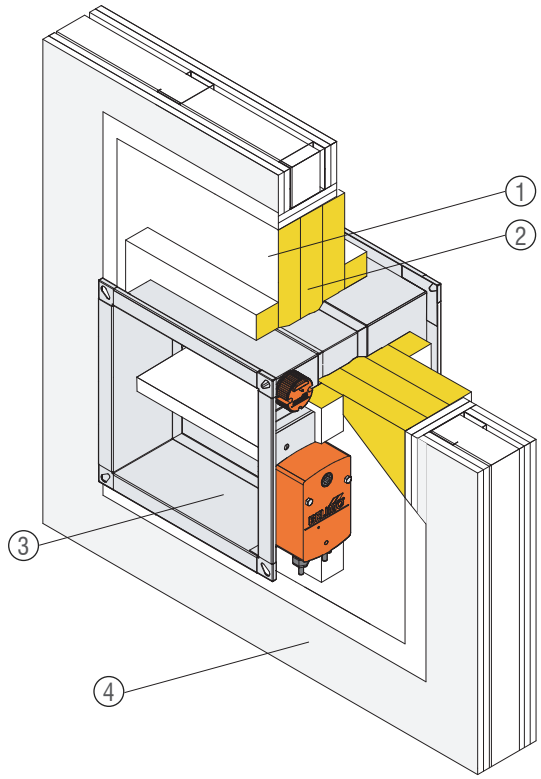

After installation check for damper blade mobility, preform an opening and closing test.

Installation in ceiling (mortarless)

Installation material: Fire damper FD40, Mineral wool >140kg/m³, Fire protection coating, (HILTI weichschott system)

Installation steps:

- Recommended ceiling opening for fire damper installation is B(H) + 400mm, but openings from B(H) +80…600 mm can also be used
- Insert fire damper into ceiling
- Damper blade must be closed during installation!!!
- Space between casing and ceiling must be closed with three layers of mineral wool (density 140 kg/m3 or more, coated on one side)
- Cut additional 50 mm straps to cover perimeter of damper and ceiling
- Connections of mineral wool must be sealed with intumescent fire resistant sealant
- Mineral wool and damper casing must be coated with 2 mm thick fire protection coating
- Actuator and release unit must not be coated!!!
- Test the fire damper after the installation

① Fire protection coating
② Mineral wool insulation
③ Fire damper FD40
④ Wall, according to table 1

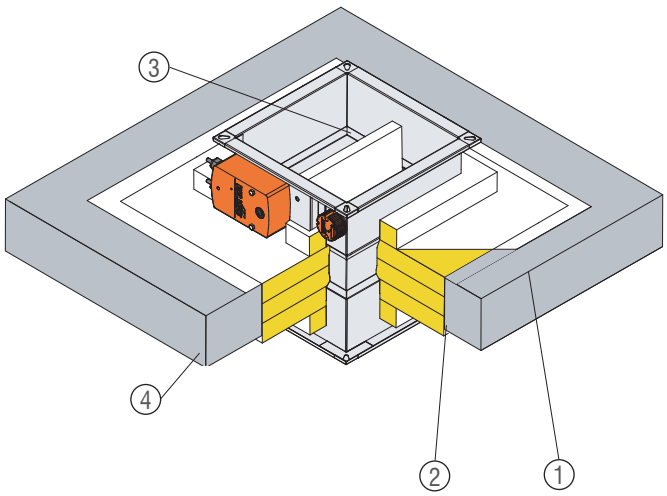

After installation check for damper blade mobility, preform an opening and closing test.

Installation remote from wall

Installation steps:

- Recommended wall opening for duct is B(H) + 100 mm insert fire damper and duct into wall
- Damper blade must be closed during installation!!!
- Space between duct and wall close with three layers of mineral wool (density 140 kg/m3 or more)
- Space between duct insulation and fire damper close with two layers of mineral wool (density 140 kg/m3 or more)
- Connections of mineral wool should be sealed with intumescent fire resistant sealant
- Apply duct insulation
- Insulate duct hinges
- Test the fire damper after the installation

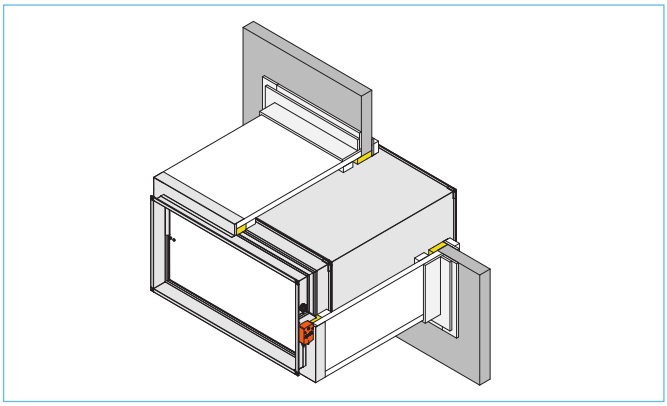

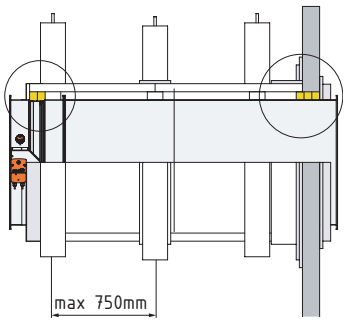

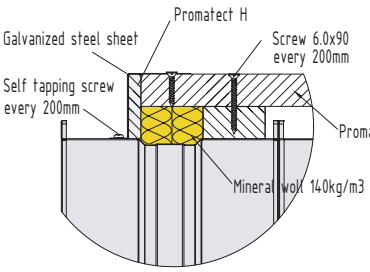

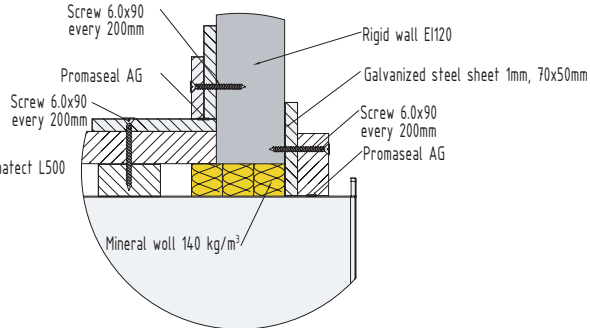

Suspension for mortarless installation

Suspension systems are required for the dry mortarless installation of the fire damper with mineral wool in solid walls, flexible walls and ceiling slabs. Fire dampers can be suspended from solid ceiling slabs using adequately sized threaded rods. Load the suspension system only with the weight of the fire damper. Ducts must be suspended separately. Suspension systems longer than 1.5 m require fire-resistant insulation.

① Threaded rod (M10) , galvanized steel
② Washer, galvanized steel
③ Nut, , galvanized steel
④ Bracket, 45x30x1,5 mm, , galvanized steel
⑤ Screw (M10)
⑥ L shaped profile (50x50x1) secured with self tapping screw to damper housing, every 400mm

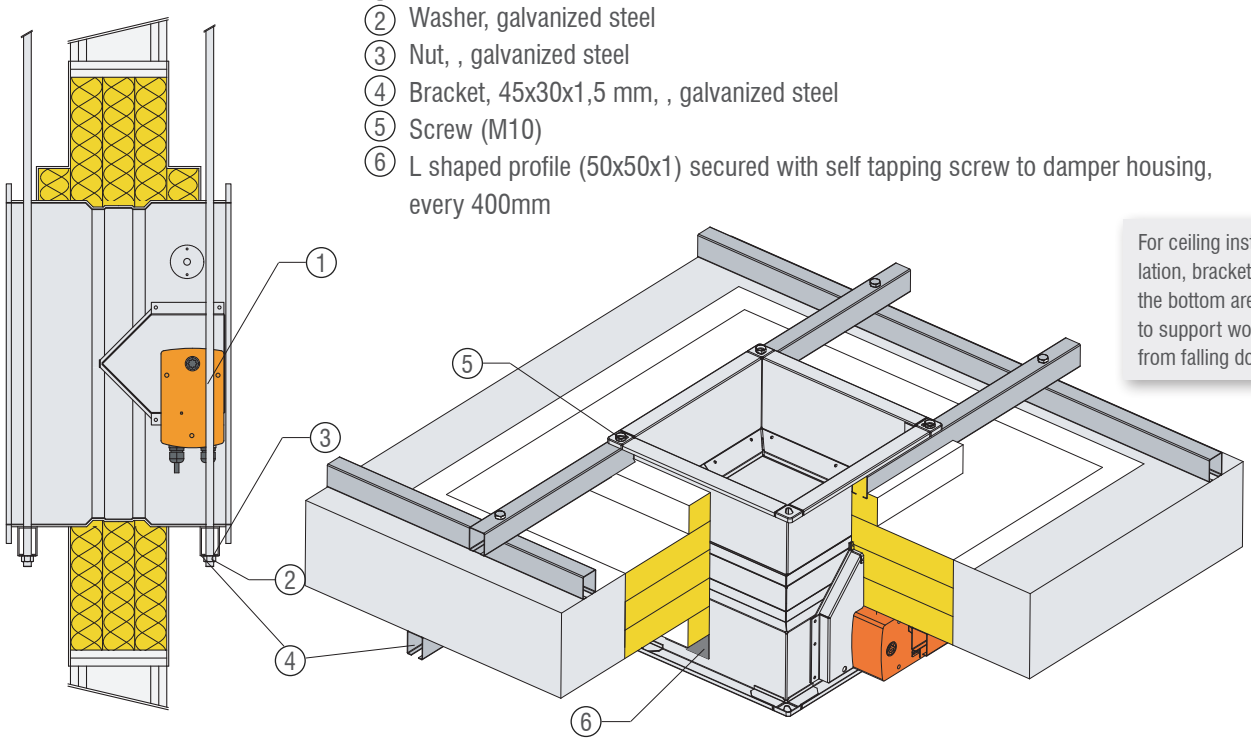

For ceiling installation, brackets on the bottom are used to support wool from falling down.

Design changes reserved

ACCESSORIES

Flexible connectors

Ventilation ducts must be installed in such manner that don't oppose loads on fire damper or wall in case of fire. This is important when dumper is installed and sealed with mineral wool. Using flexible connectors when connecting fire dampers to ducts can eliminate that problem. Flexible connectors are available on demand in dimensions same as fire dampers.

When flexible connectors are being installed very important is to install extension peace if necessary (see table 2).

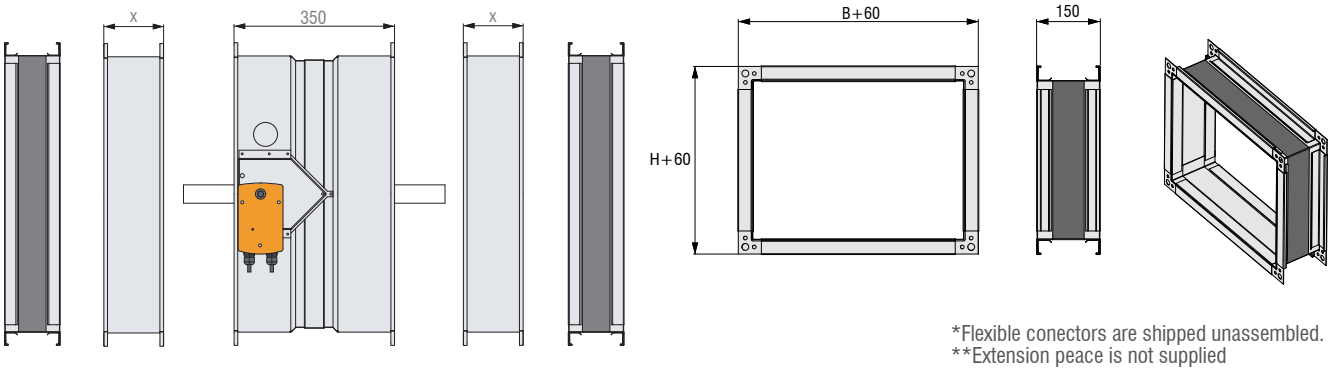

*Flexible conectors are shipped unassembled.
**Extension peace is not supplied

Cover grille

If fire damper is to be ducted only from one side, other end must have a cover grille. Cover grills have cross sectional free area approximately 70%. When cover grilles are being installed very important is to install extension peace if necessary (see table 2).

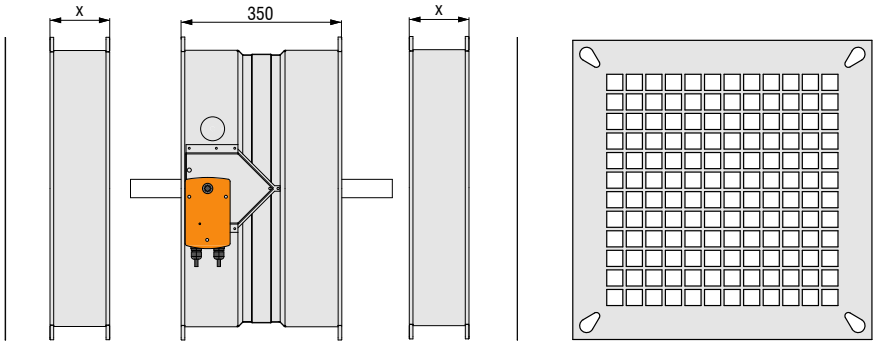

*Cover grilles are shipped unassembled.
**Extension peace is not supplied

Circular spigot plate

Circular spigot plates are being used to connect circular ducts to rectangular fire dampers. When circular spigot plates are being installed very important is to install extension peace if necessary (see table 2). Plate is equipped with a lip seal.

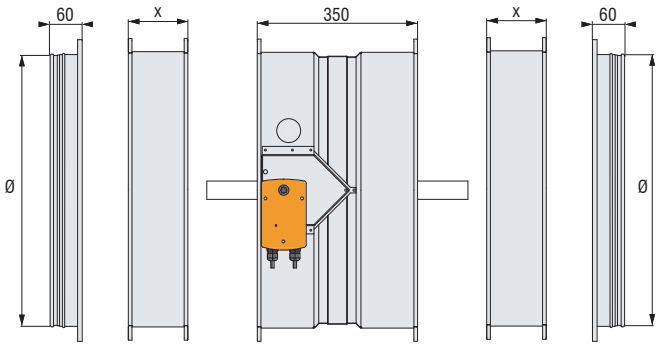

*Circular spigot plates are shipped unassembled.
**Extension peace is not supplied

Table 2

H [mm] (fire damper height)	200	250	300	350	400	450	500	550	600	650	700	750	800
X [mm] (extension peace length)	/	/	/	/	250	250	250	250	250	250	250	250	250

OPERATING INSTRUCTIONS

FD40-R rectangular fire damper with manual mechanism

Fire damper is shipped with closed damper blade. Fire damper with manual actuating mechanism is open by turning handle counter-clockwise. Test of damper function is performed by pressing on a specified place on a lever. Fire damper can be optionally equipped with limit switches.

Limit switches used on fire dampers give indication of damper blade position. Relays or indicator lights for fire alarm systems can be used up to the maximum switch rating (5A). One limit switch is required for damper blade position OPEN and one for CLOSED. Fire dampers with a fusible link can be supplied with one or two limit switches, the switches can also be fitted later.

DAMPER CLOSED
(TURN HANDLE TO OPEN)

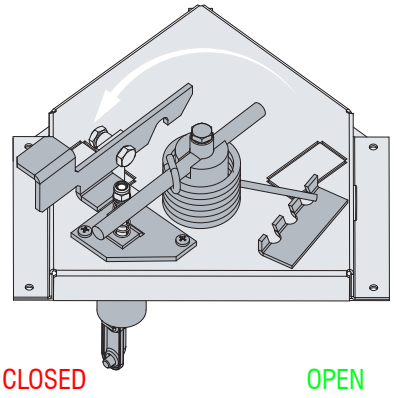

DAMPER OPEN
(PRESS LEVER TO CLOSE)

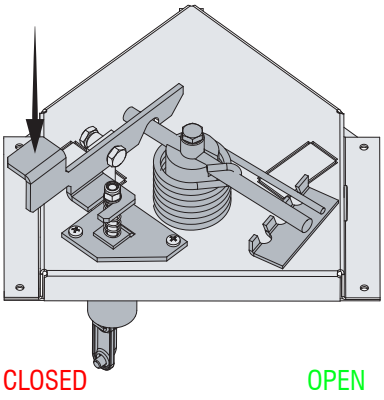

LIMIT SWITCHES

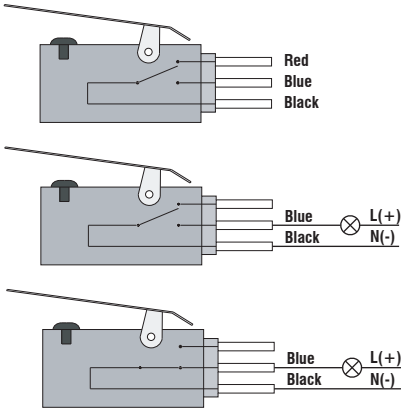

FD40-R rectangular fire damper with solenoid actuator

Fire damper is shipped with closed damper blade. Fire damper with manual actuating mechanism is open by turning handle counter-clockwise. Test of damper function is performed by pressing on a specified place on a lever, or by supplying solenoid with an current impulse. Fire damper can be optionally equipped with limit switches.

Limit switches used on fire dampers give indication of damper blade position. Relays or indicator lights for fire alarm systems can be used up to the maximum switch rating (Table 1.). One limit switch is required for damper blade position OPEN and one for CLOSED. Fire dampers with a fusible link can be supplied with one or two limit switches, the switches can also be fitted later.

DAMPER CLOSED

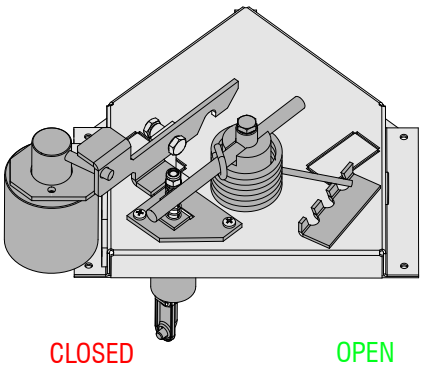

DAMPER OPEN

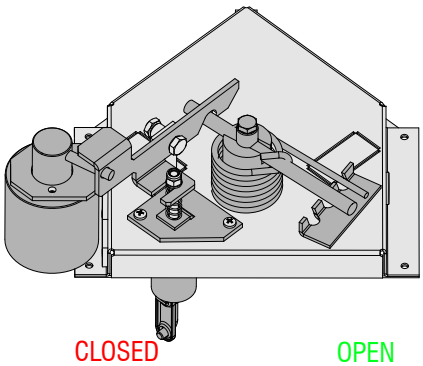

WIRING SCHEME

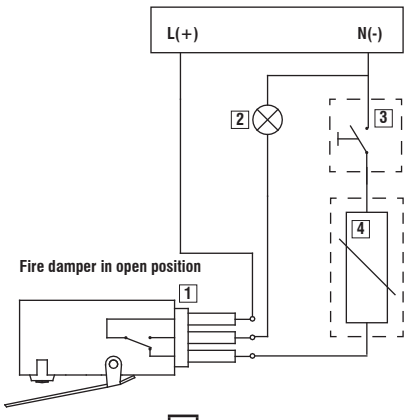

1	Limit switch
2	Signal light
3	Closing switch
4	Solenoid actuator

Design changes reserved

Electrical characteristics and wiring scheme of electrical Belimo actuator

Damper is delivered in closed position. When electric actuator is connected to the power supply damper will open. When the damper reaches the end position (damper open), in which is it blocked, the electromotor will stop. Closing fire damper takes place automatically when a power failure occurs. Thermal tripping device that comes with fire damper causes power circuit break at a temperature of 72 °C (inside or outside duct). If checking is needed for proper fuctioning of fire damper, pushing the switch on the thermal tripping device will close damper. When switch on tripping device is released, the damper will open.

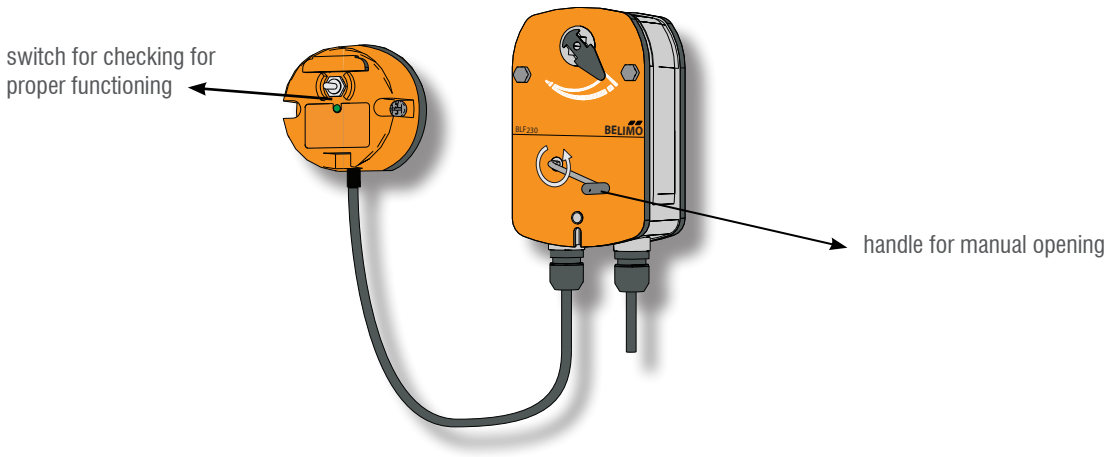

Damper can be opened without connecting to a voltage with enclosed handle turning in the direction of the arrow on electric acuator (clockwise). Damper can be locked in the desired position by fast turning back handle a quarter of a turn (counterclockwise).
To unlock the electromotor, turn handle clockwise for a quarter of a turn. If the handle is released, damper will be closed by return spring. When damper is opened manually, electric actuator will not move the damper into closed position after power failure (thermoelectric fuse).

Type of Belimo actuator		BLF24-T	BF24-T	BLF230-T	BF230-T
Nominal voltage / power consumption	voltage	AC/DC 24V, 50/60Hz	AC/DC 24V, 50/60Hz	AC 230V, 50/60Hz	AC 230V, 50/60Hz
	opening	5 W	7 W	6 W	8 W
	holding	2,5 W	2 W	3 W	3 W
	for wire sizing	7 VA	10 VA	7 VA	12,5 VA
End switch		1 mA...3 A (0,5 A), DC 5 V...AC 250V	1mA...6A (3A), DC 5V... AC 250V	1 mA...3 A (0.5 A), DC 5 V...AC 250 V	1 mA...6 A (3 A), DC 5 V...AC 250 V
Running time	motor	40...75 s	<120 s	40...75 s	<140 s
	spring-return	~20 s	~16 s	~20 s	~16 s
Ambient temperature range		max. 50°C			

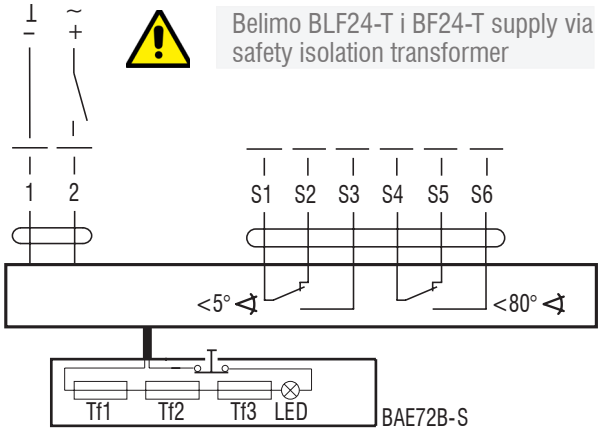

Belimo BLF24-T i BF24-T supply via safety isolation transformer

1	negative (direct-current) or neutral (alternating current)
2	positive (direct-current) or faze (alternating current)
S1	common micro switch closed damper
S2	normally closed micro switch closed damper
S3	normally open micro switch closed damper
S4	common micro switch open damper
S5	normally closed micro switch open damper
S6	normally open micro switch open damper
Tf1	temperature sensor on the outer side of the duct (ambienttemperature) max. 72°C
Tf2	temperature sensor on the inner side of the duct (temperature in the duct) max. 72°C
Tf3	temperature sensor on the inner side of the duct (temperature in the duct) max. 72°C

FIRE DAMPER CONTROL

Digital controller K-M200



- Digital controller K-M200 to control and monitor up to 200 motorized fire dampers and 200 smoke detectors
- Pre-programmed for fire safety application
- No programming knowledge necessary! Simple parameterisation through touch screen or remote access via web browser
- Communication: Modbus RTU (RS-485) to the K-FC24's / K-UFC24's and the internal I/O's, TCP / IP (Ethernet RJ45) for remote access or combining multiple units. Integrated IP-address
- Automatic test of the whole system including test report

Digital field controller K-FC24

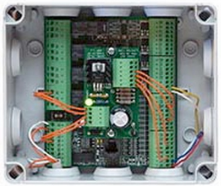

- Digital field controller to control and monitor up to 4 motorized fire dampers and 4 smoke detectors
- Communication: Modbus RTU (RS-485)
- The safety function of the connected devices is not affected when communication with Modbus is interrupted

Universal digital field controller K-UFC24



- Universal System Link between motorized fire or smoke extraction dampers and any Modbus or BACnet system or analog control
- Controls and monitors max 2 fire or smoke extraction dampers as well as 1 smoke detector and 1 thermoelectrical tripping device
- The Universal Field Controller offers 3 different control modes (to be chosen through dip switch terminals) :
- Fire or smoke extraction application
- Bus protocols: Modbus (RS-485) or BACnet (Ms/Tp)
- Analog: Input and output signals
- Easy to install thanks to the mounting bracket which can be pre-installed. The UFC24 can be snapped on any time during the project
- Easy and clear indication of function, position and status with LEDs
- Independent functional control through test key at any time

System overview

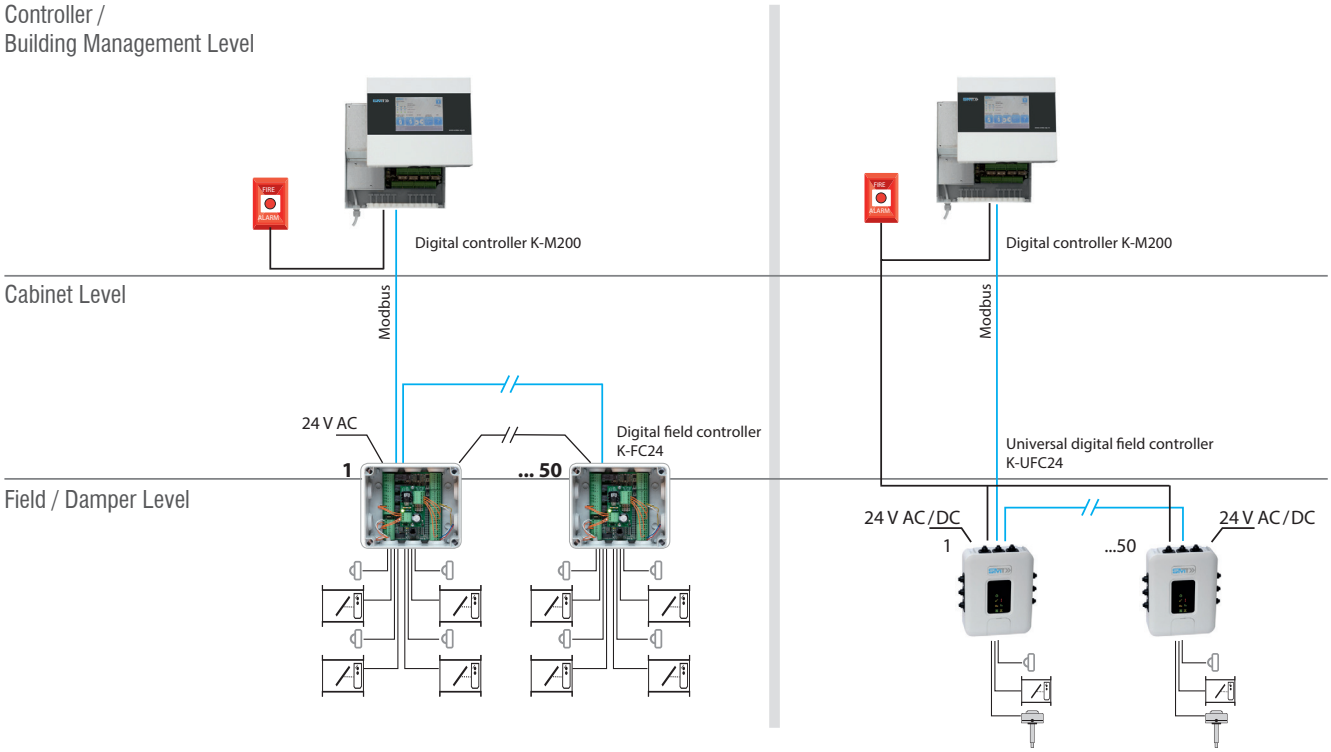

Design changes reserved